# MISCANTI

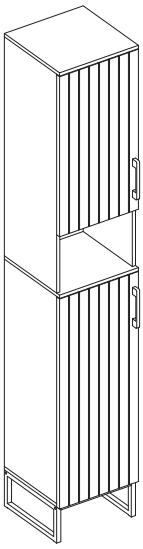

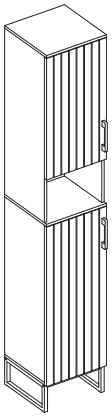

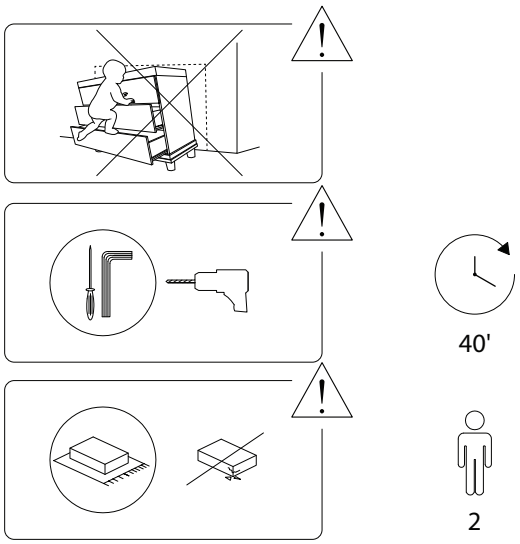






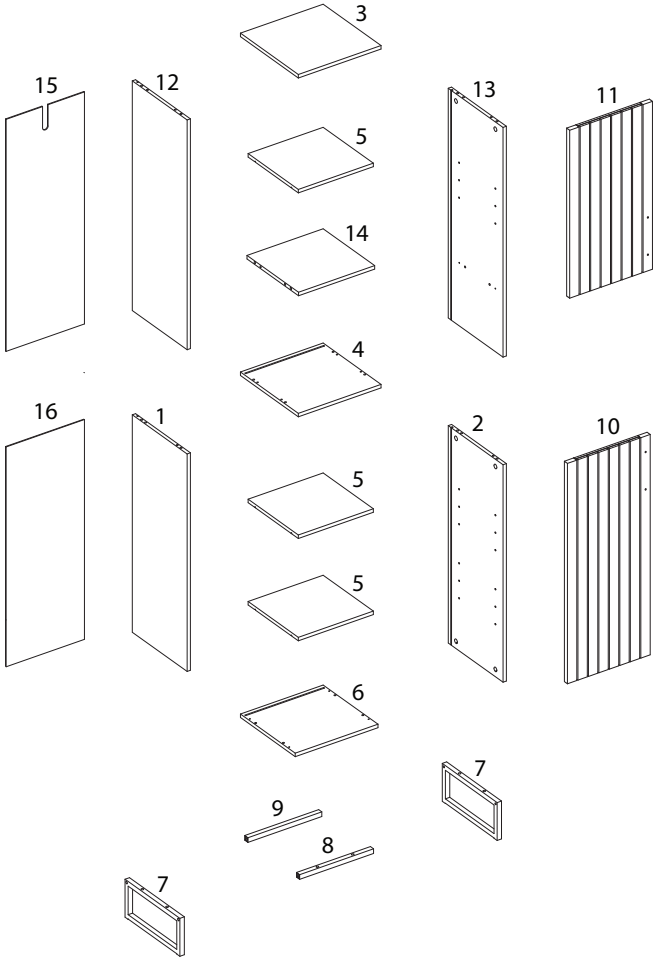


| | | |
|---|---|---|
| 1 x 1 | 2 x 1 | 3 x 1 |
| 4 x 1 | 5 x 3 | 6 x 1 |
| 7 x 2 | 8 x 1 | 9 x 1 |
| 10 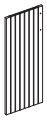 x 1 | 11 x 1 | 12 x 1 |
| 13 x 1 | 14 x 1 | 15 x 1 | 16 x 1 |

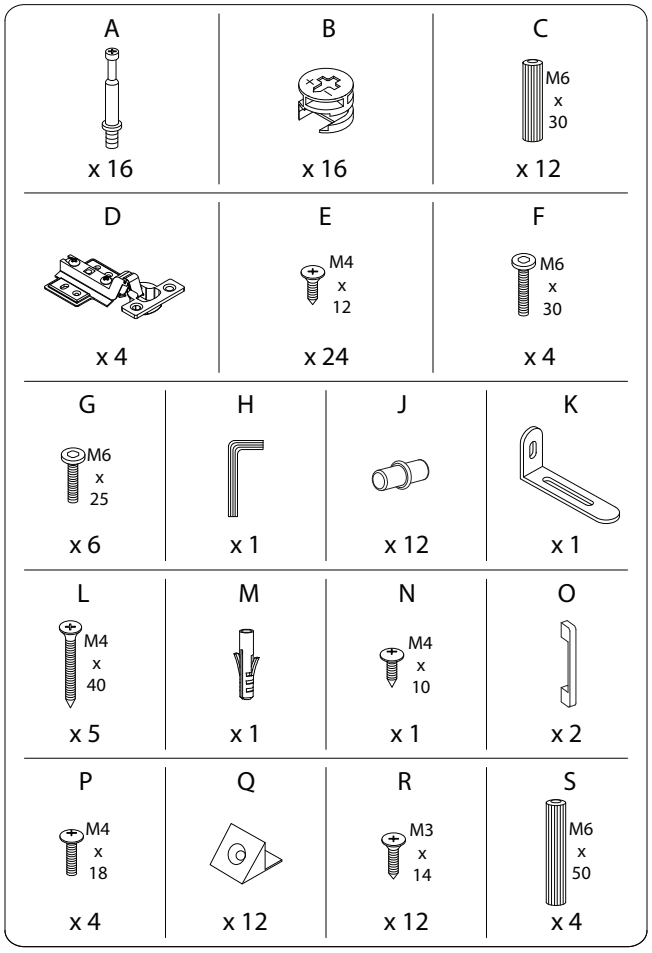
A
x 16
B
x 16
C
M6 x 30
x 12
D
x 4
E
M4 x 12
x 24
F
M6 x 30
x 4
G
M6 x 25
x 6
H
x 1
J
x 12
K
x 1
L
M4 x 40
x 5
M
x 1
N
M4 x 10
x 1
O
x 2
P
M4 x 18
x 4
Q
x 12
R
M3 x 14
x 12
S
M6 x 50
x 4





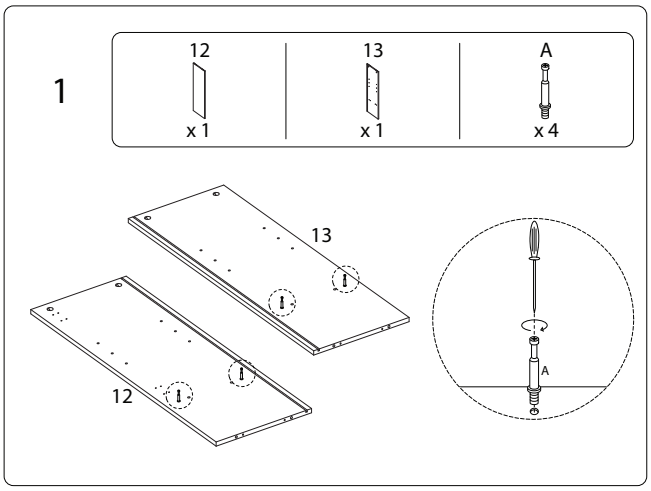
1
12
x 1
13
x 1
A
x 4
13
12
A

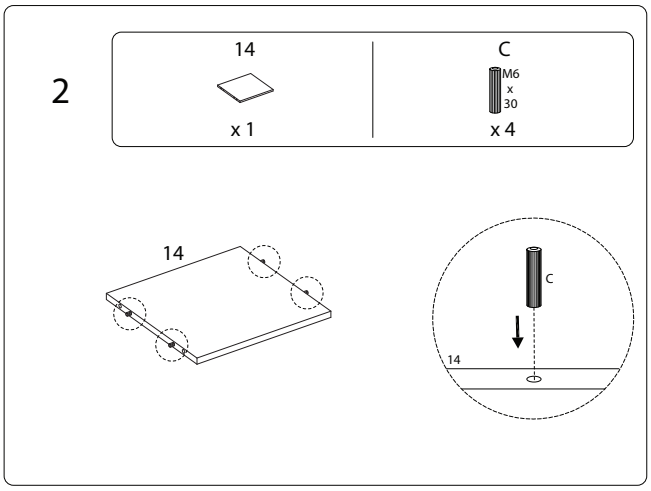
2
14
x 1
C
M6 x 30
x 4
14
C
14





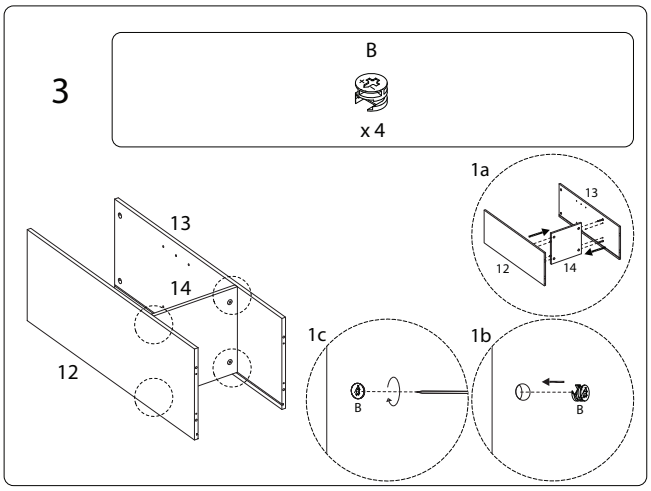
3
B
x 4
13
14
12
1a
13
12
14
1c
B
1b
B

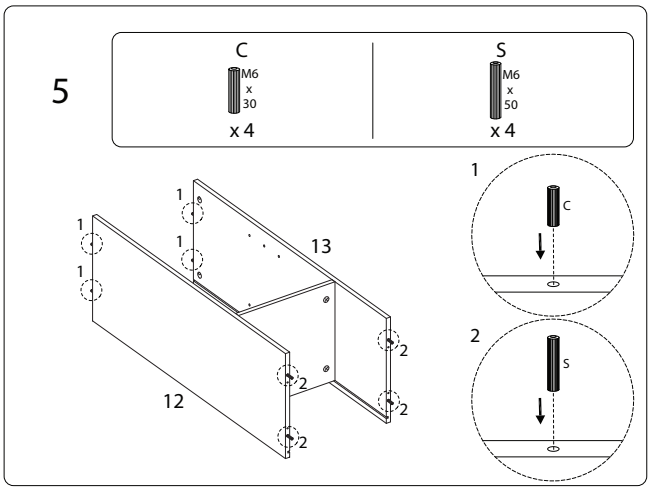
5
C
M6 x 30
x 4
S
M6 x 50
x 4
1
1
1
13
12
2
2
2
2
1
C
2
S

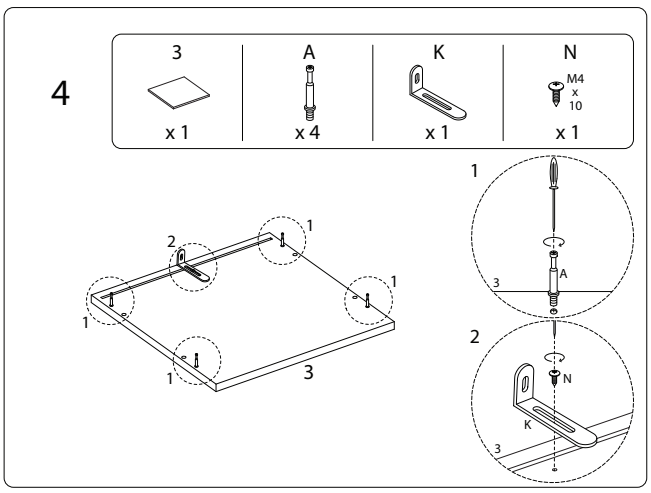
4
3
x 1
A
x 4
K
x 1
N
M4 x 10
x 1
2
1
1
1
1
3
1
A
3
2
N
K
3





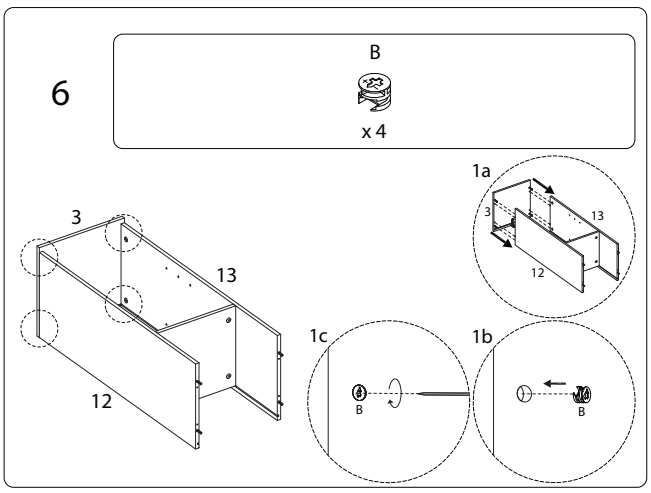
6
B
x 4
3
13
12
1a
3
13
12
1c
B
1b
B

## 7

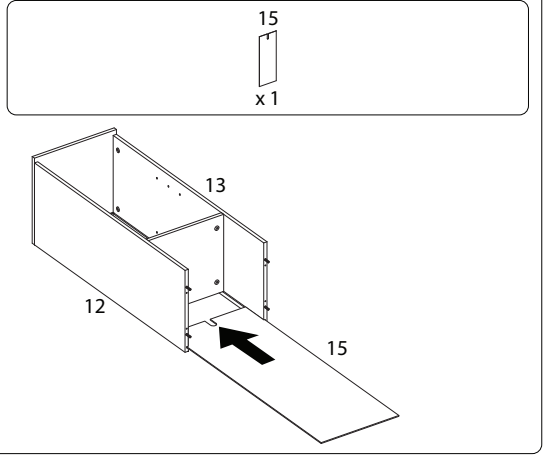


## 8

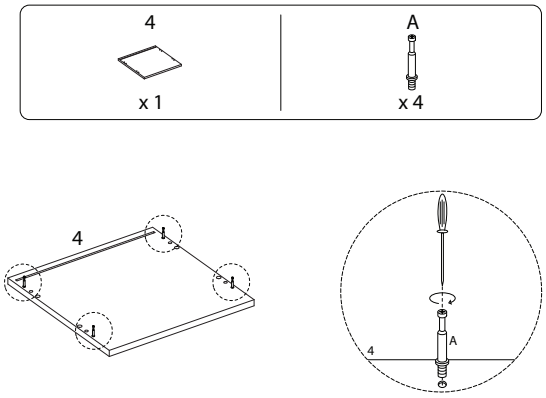






## 9

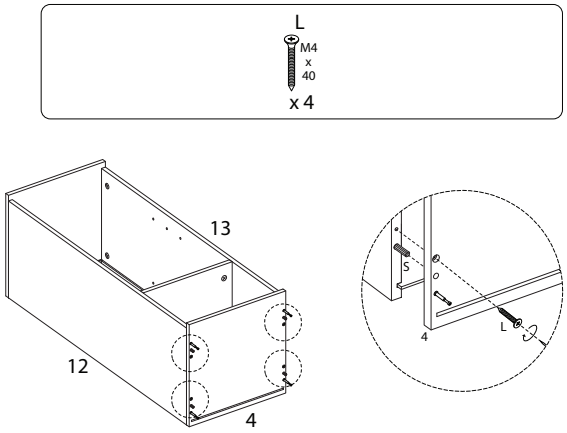


## 10

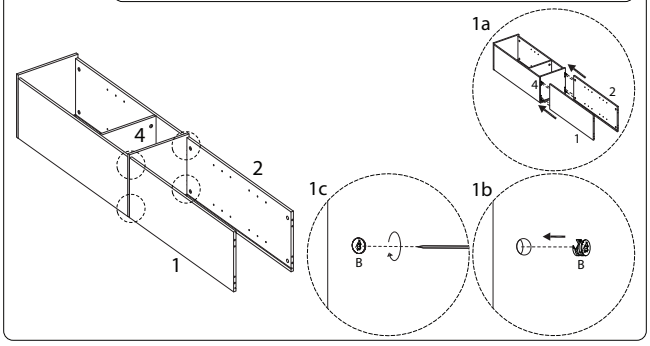






## 11

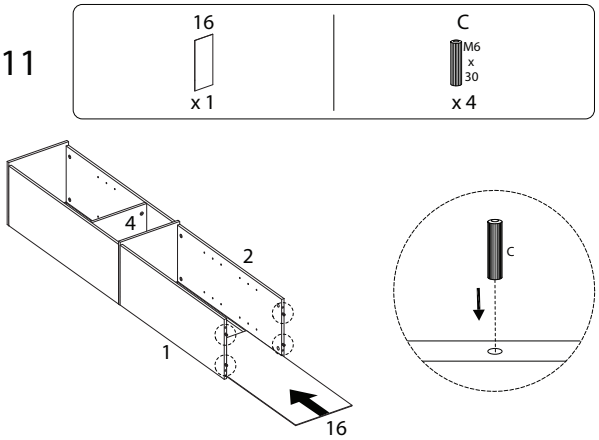


## 12

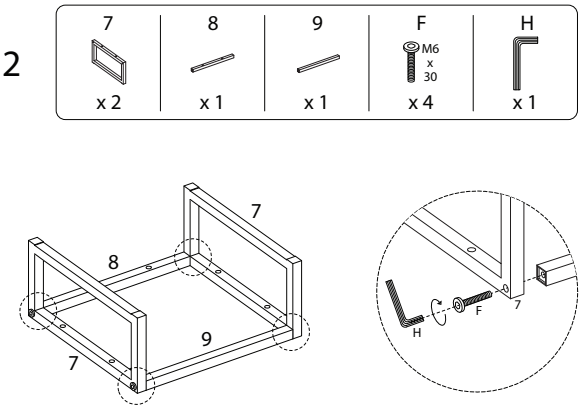






## 13

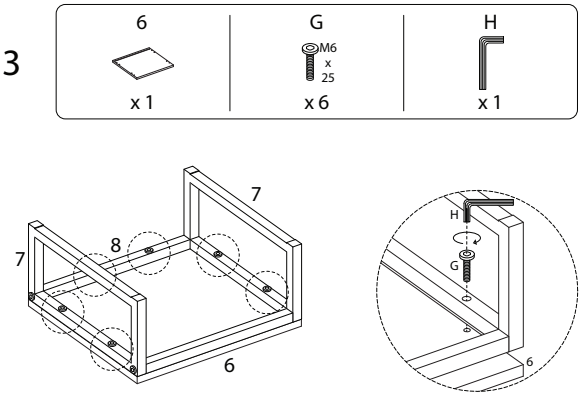


## 14

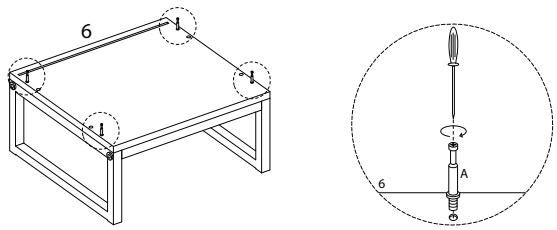

## 15

B

x 4

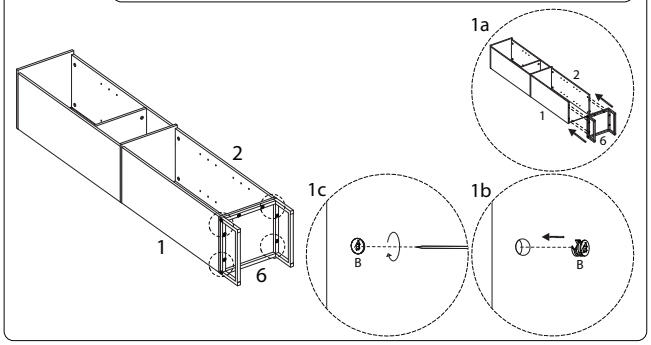


## 16

J

x 12

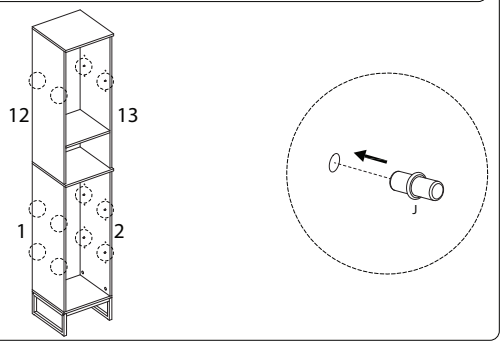




## 17

5

x 3

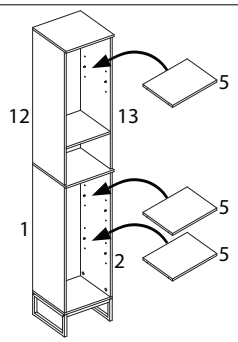


## 18

| 10 | 11 | D | E |
|---|---|---|---|
| x 1 | x 1 | x 4 | M4 x 12 x 8 |

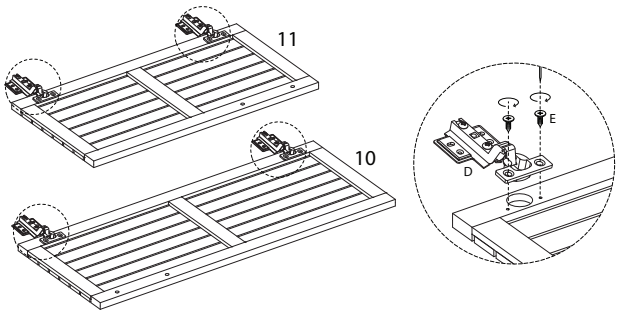




## 19

| O | P |
|---|---|
| x 2 | M4 x 18 x 4 |

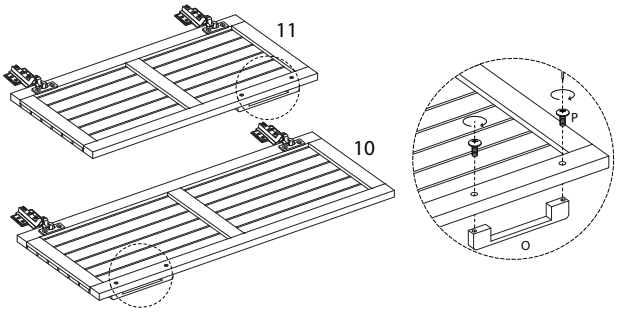


## 20

E

M4 x 12

x 16

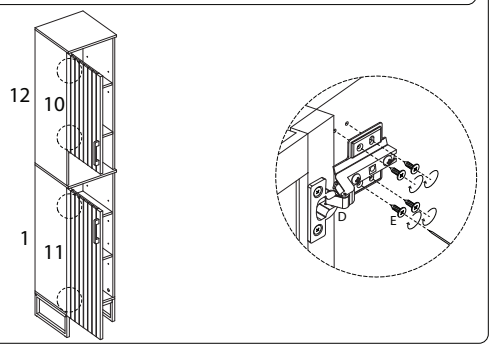




## !

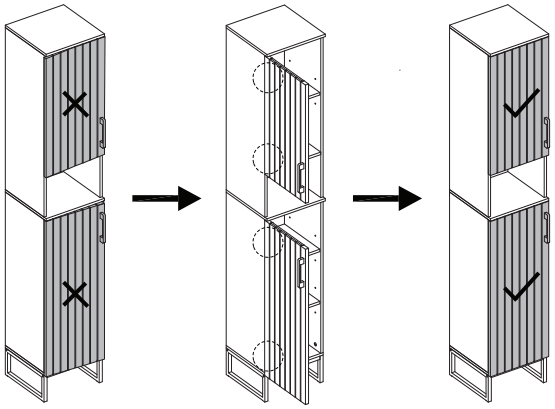

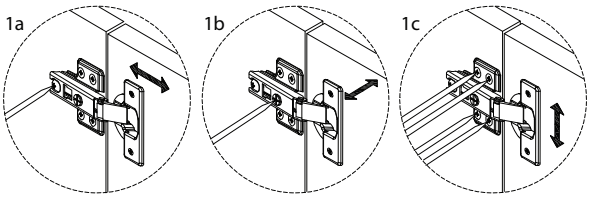

## 21

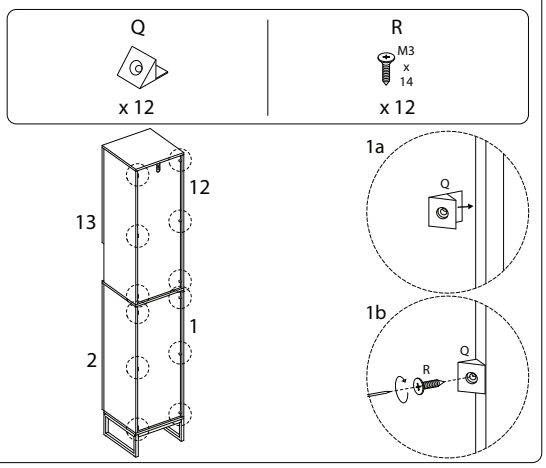


## 22

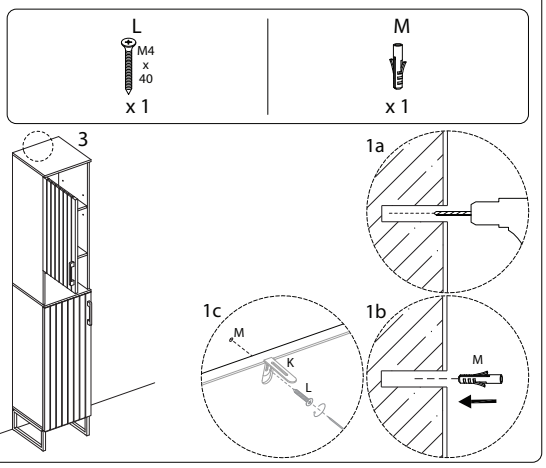




2213/MISCANTI/111225/