# CAVI

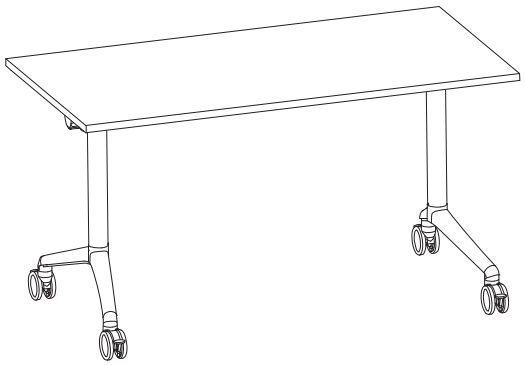

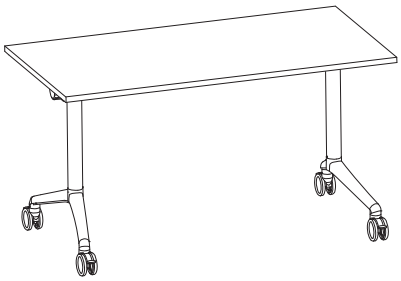

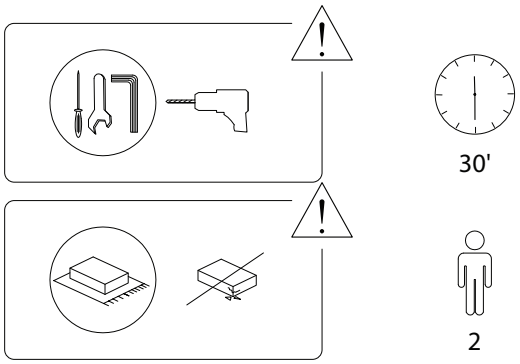


1/9

2249/CAVI/050724/

| A | B |
|---|---|
|  |  |
| x 1 | x 1 |

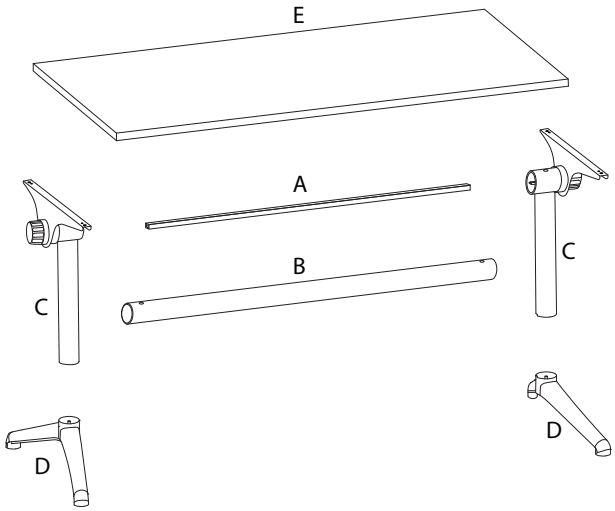


| C | D | E |
|---|---|---|
|  |  |  |
| x 2 | x 2 | x 1 |

2/9

2249/CAVI/050724/

| 1 | 2 | 3 |
|---|---|---|
|  M8 |  |  |
| x 1 | x 1 | x 4 |
| **4** | **5** | **6** |
|  M16 x 8 |  |  M5 x 20 |
| x 2 | x 1 | x 6 |
| **7** | **8** | **9** |
|  M5 |  | 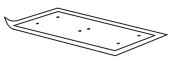 |
| x 1 | x 4 | x 1 |

3/9

2249/CAVI/050724/

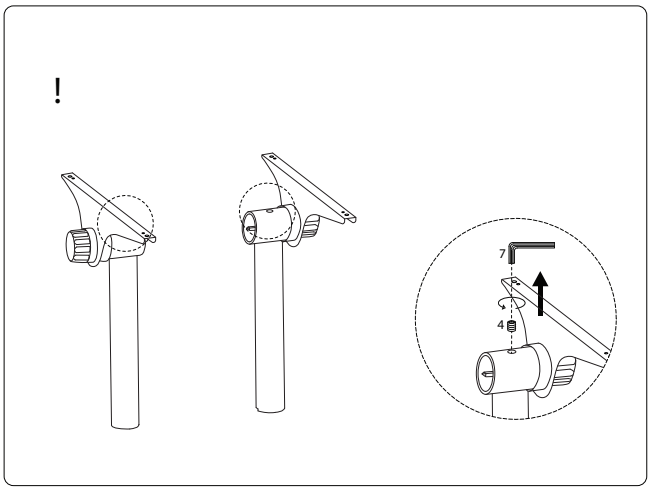
!
7
4

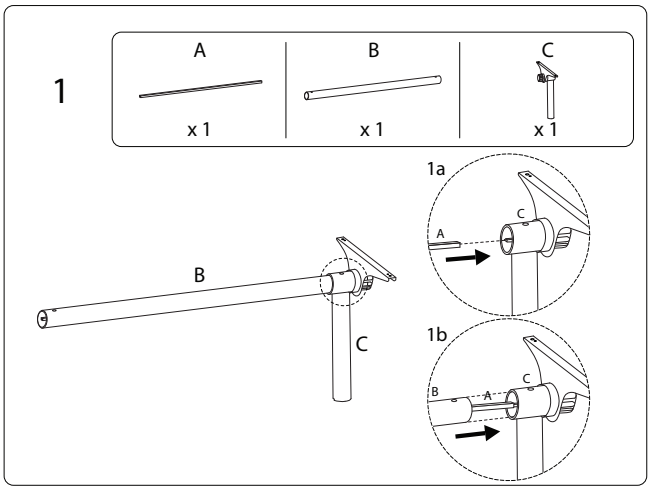
1
A
x 1
B
x 1
C
x 1
1a
1b
B
C





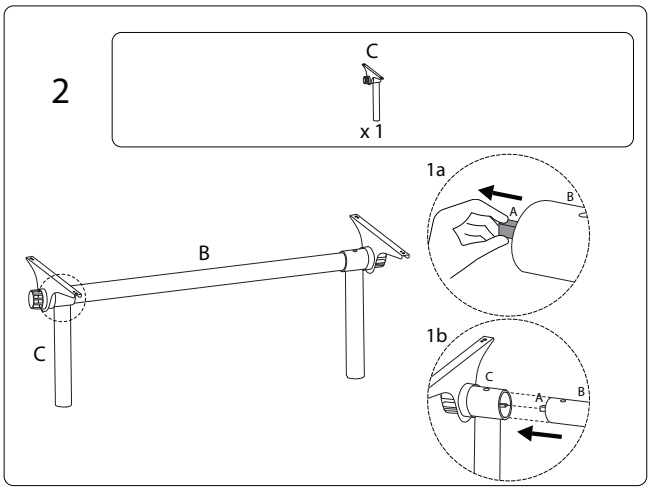
2
C
x 1
1a
1b
B
C

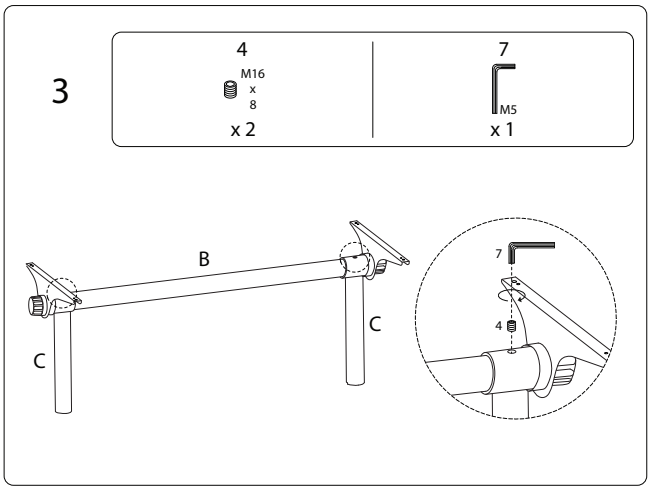
3
4
M16
x
8
x 2
7
M5
x 1
B
C
7
4





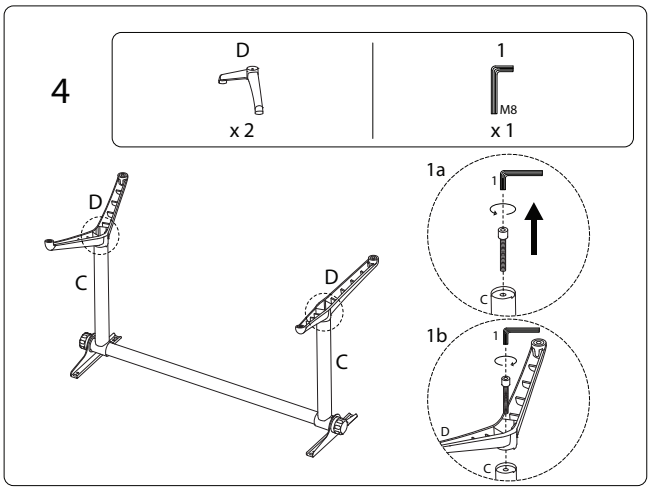
4
D
x 2
1
M8
x 1
1a
1b
D
C

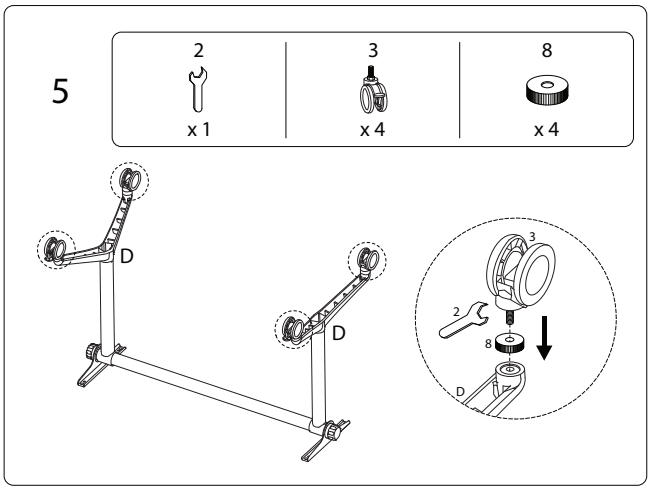
5
2
x 1
3
x 4
8
x 4
D
3
2
8





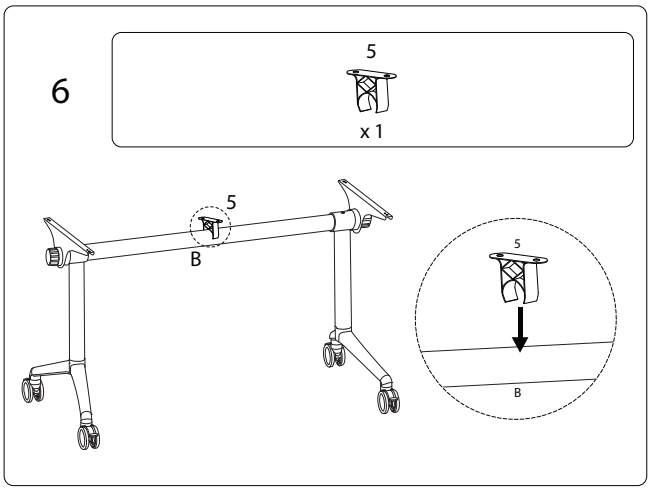
6
5
x 1
5
B

7

E

x 1

9

x 1

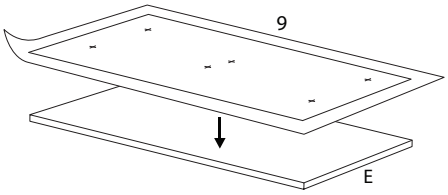


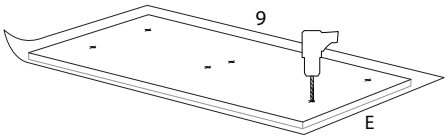


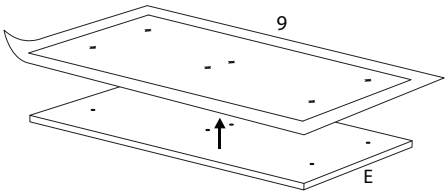


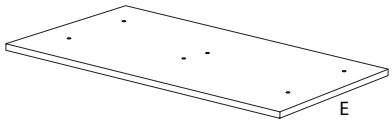






8

6

M5 x 20

x 6

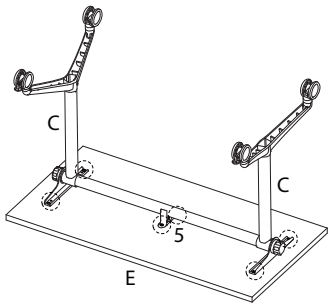


!

