ESLANE

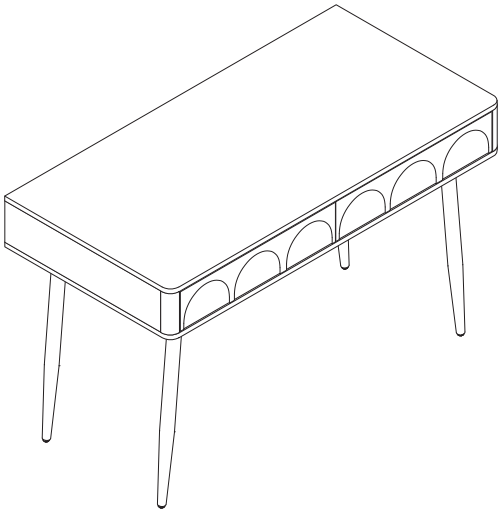

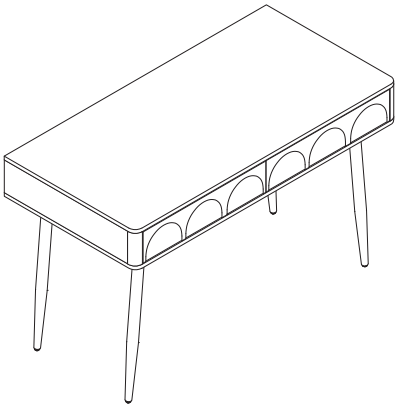

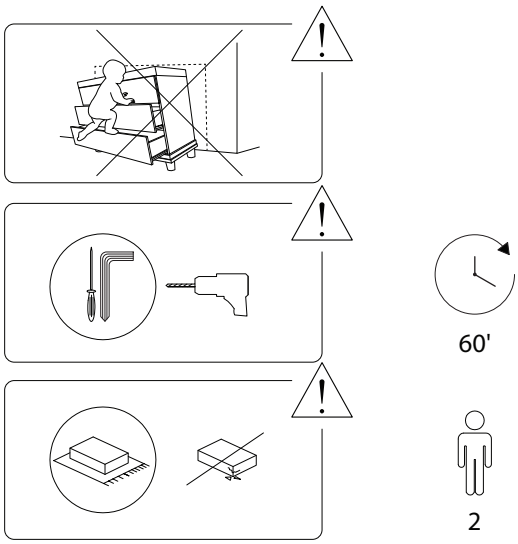

2696/ESLANE/150526/

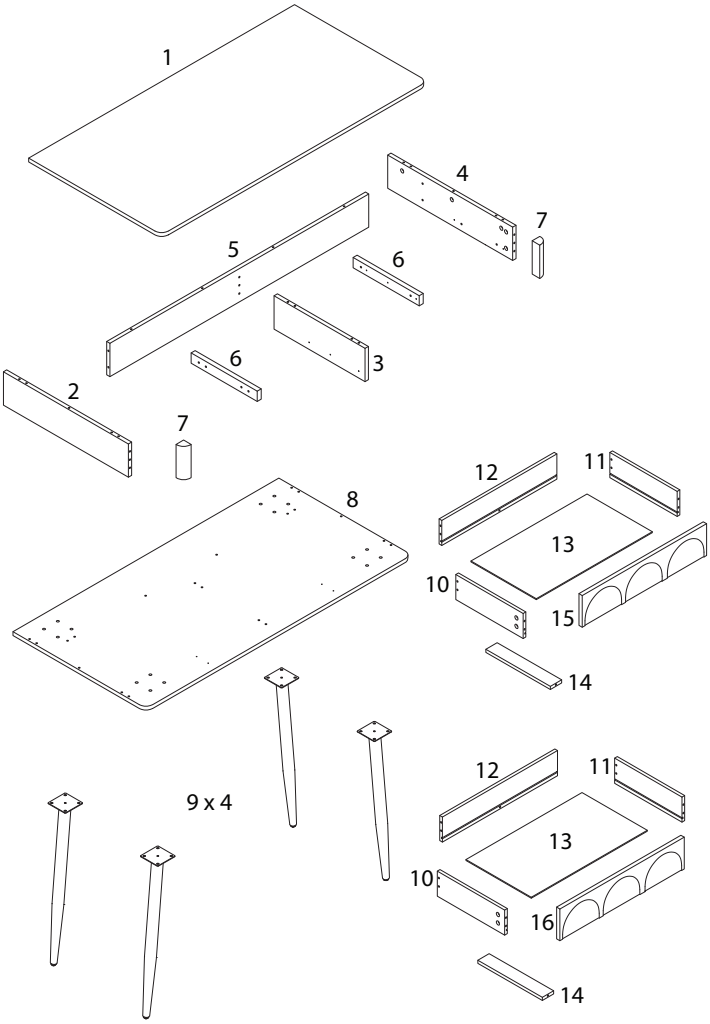

2696/ESLANE/150526/

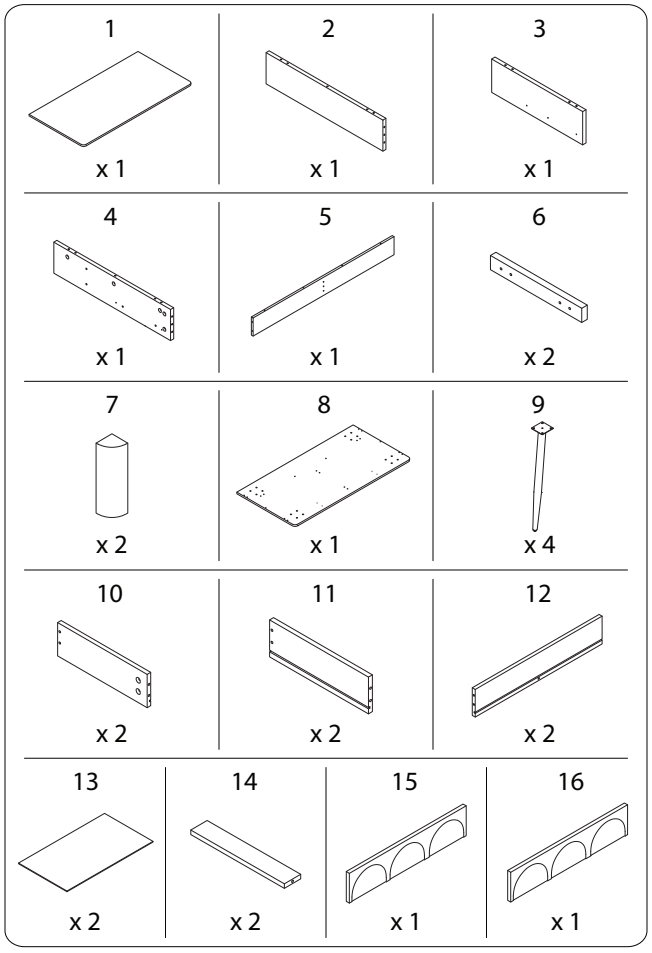

2696/ESLANE/150526/

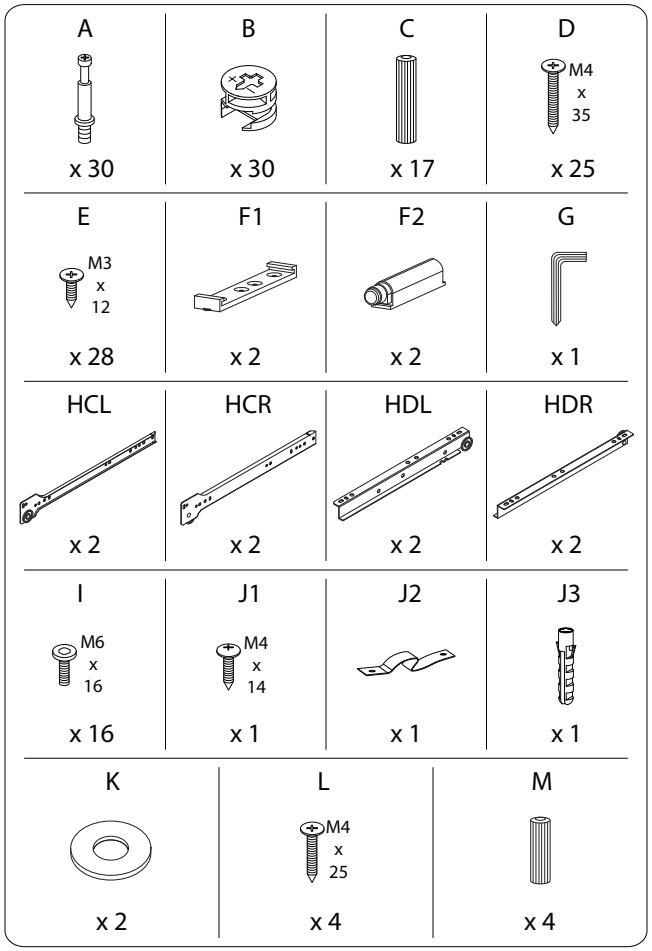
A
x 30
B
x 30
C
x 17
D
M4 x 35
x 25
E
M3 x 12
x 28
F1
x 2
F2
x 2
G
x 1
HCL
x 2
HCR
x 2
HDL
x 2
HDR
x 2
I
M6 x 16
x 16
J1
M4 x 14
x 1
J2
x 1
J3
x 1
K
x 2
L
M4 x 25
x 4
M
x 4

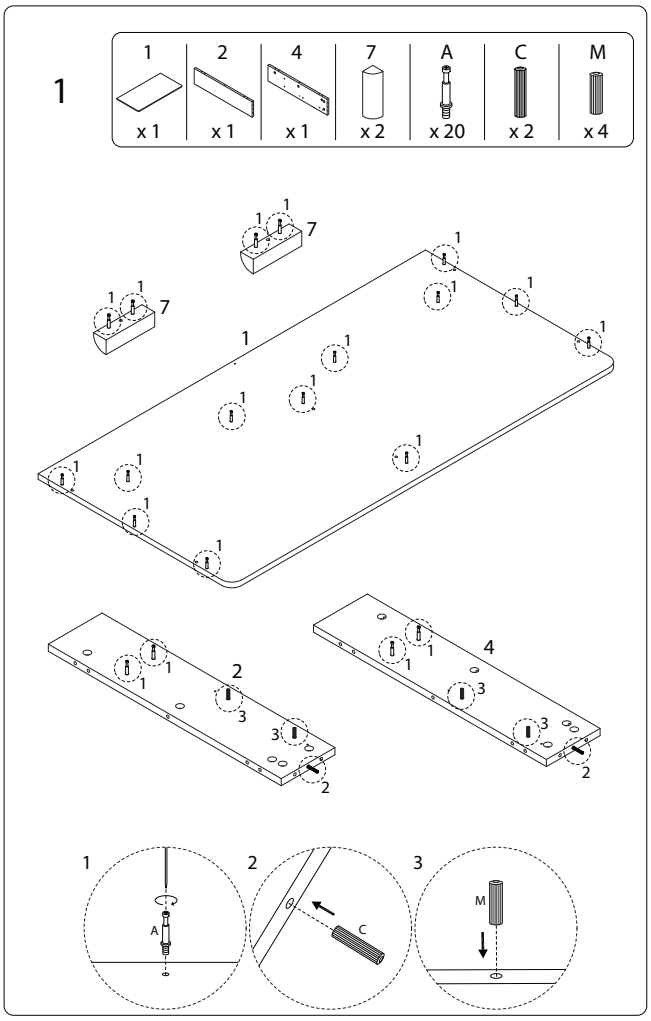
1
1 x 1
2 x 1
4 x 1
7 x 2
A x 20
C x 2
M x 4

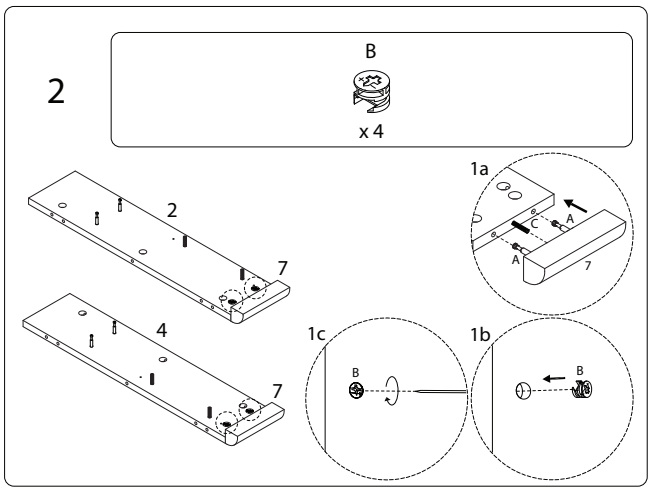
2
B
x 4
1a
1c
1b

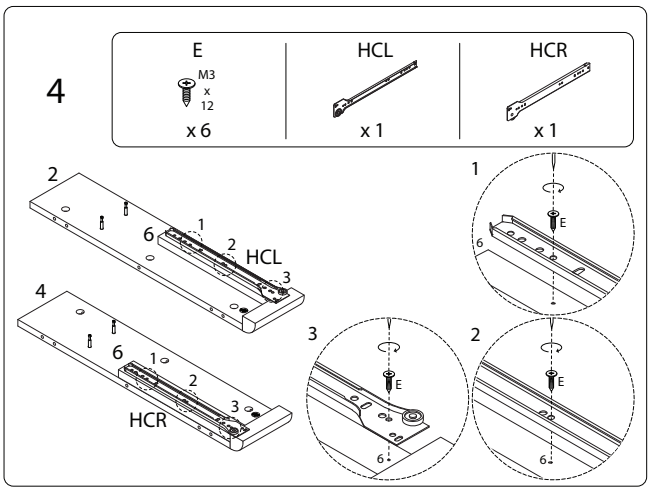
4
E
M3 x 12
x 6
HCL
x 1
HCR
x 1

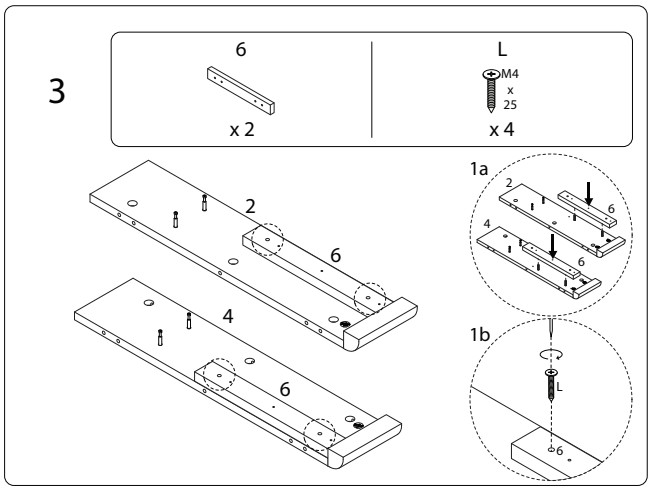
3
6
x 2
L
M4 x 25
x 4
1a
1b

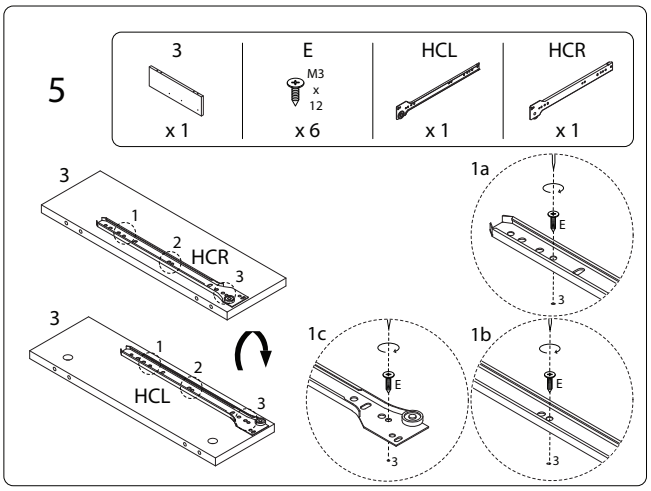
5
3
x 1
E
M3 x 12
x 6
HCL
x 1
HCR
x 1
1a
1c
1b

6

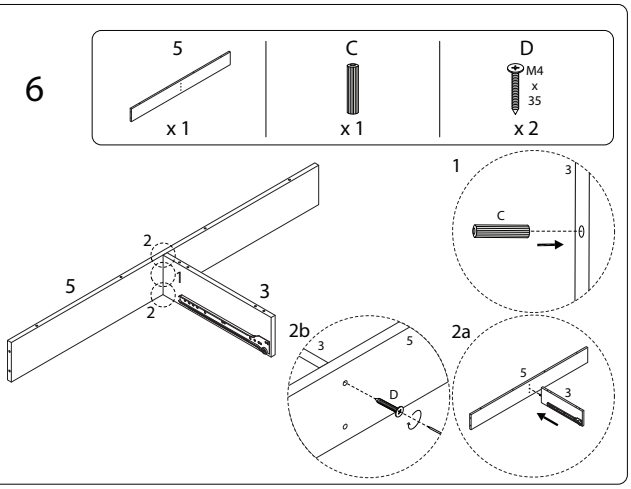

7

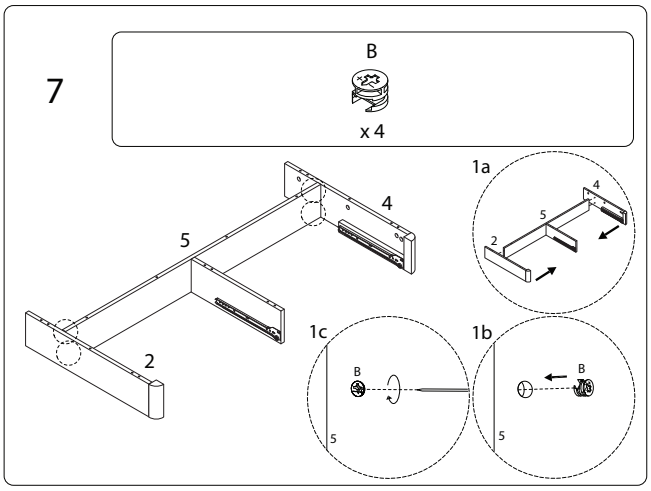

8

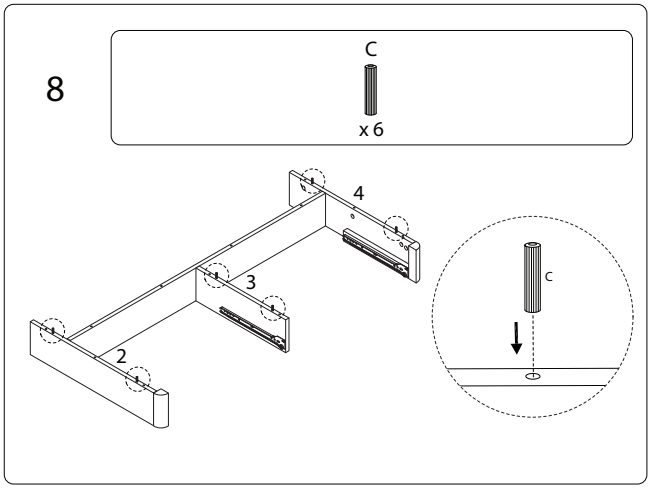

9

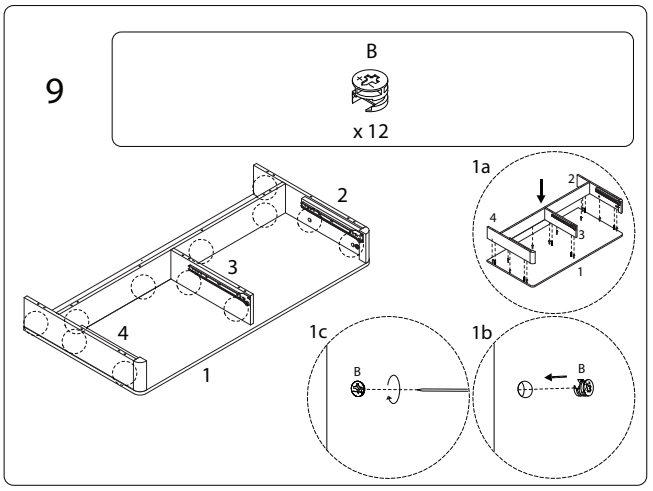

10

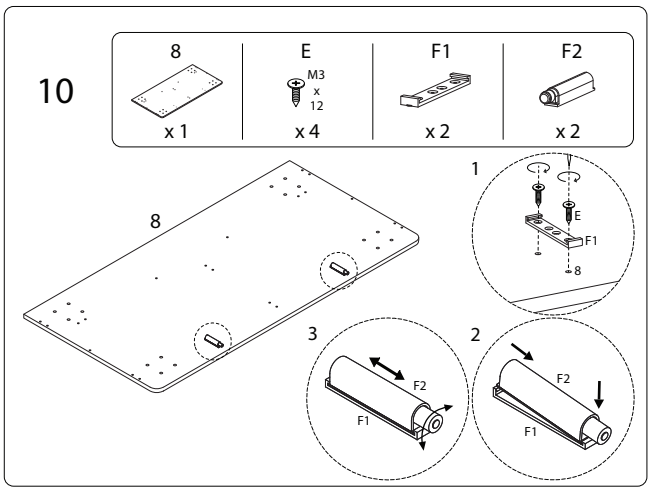

11

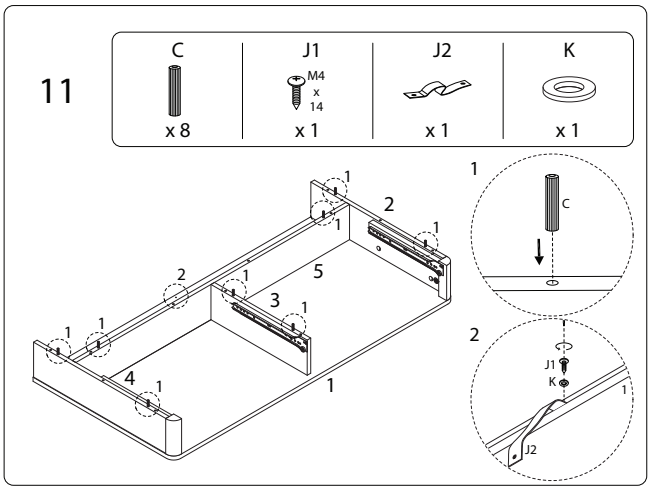

12

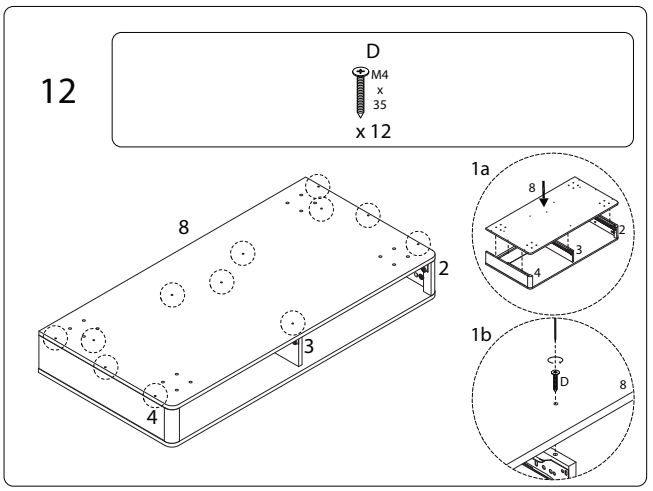

13

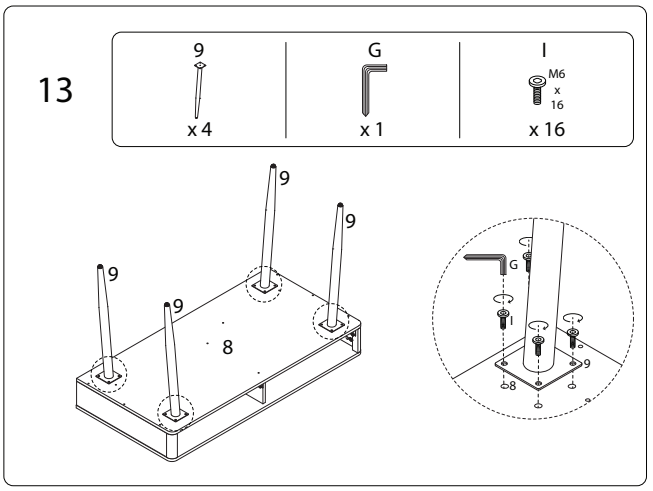

14 x 2

10	11	12	14	D
x 1	x 1	x 1	x 1	M4 x 35 x 5

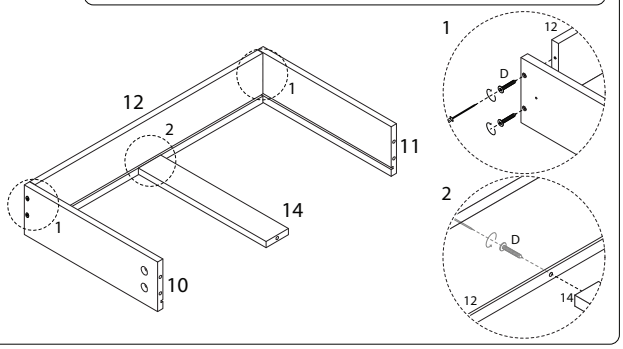

15 x 2

13
x 1

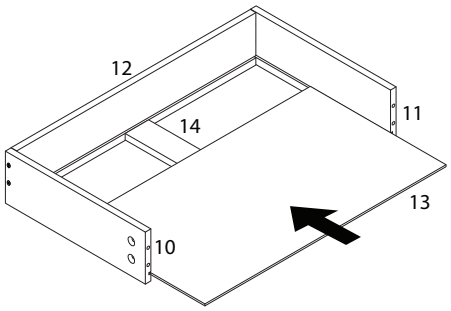

16

15	16	A
x 1	x 1	x 10

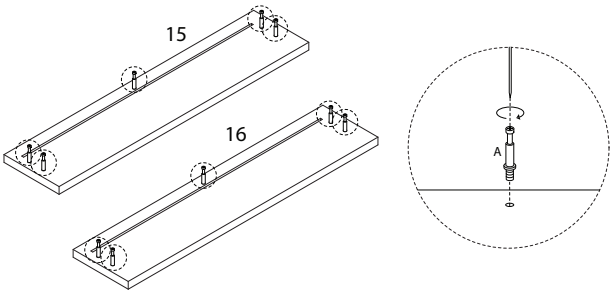

17

B
x 5

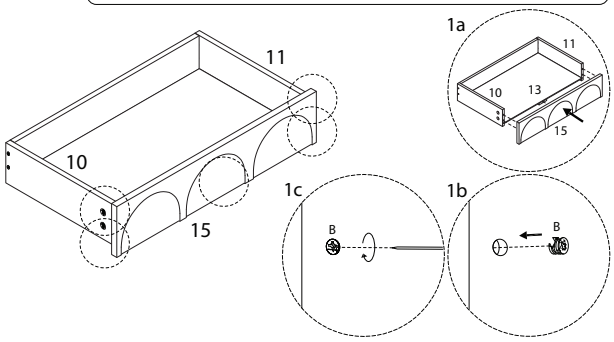

18

B
x 5

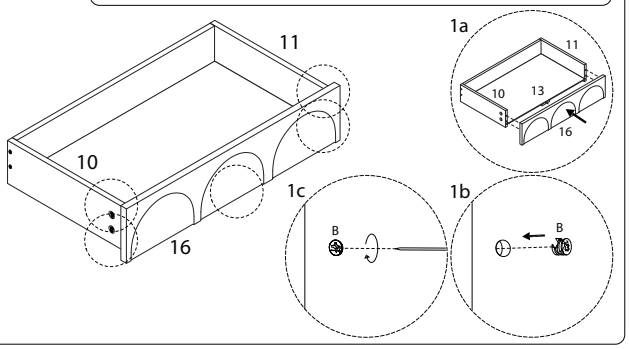

19

E	HDL	HDR
M3 x 12 x 6	x 1	x 1

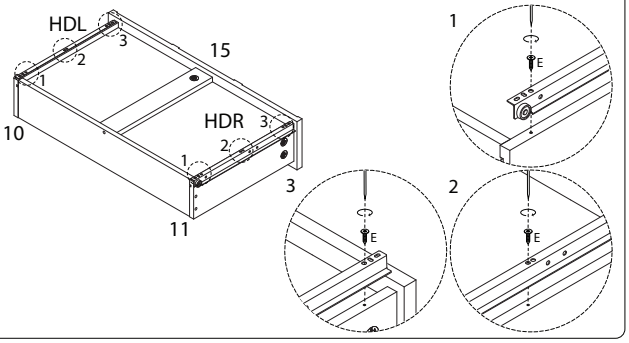

20

E	HDL	HDR
M3 x 12 x 6	x 1	x 1

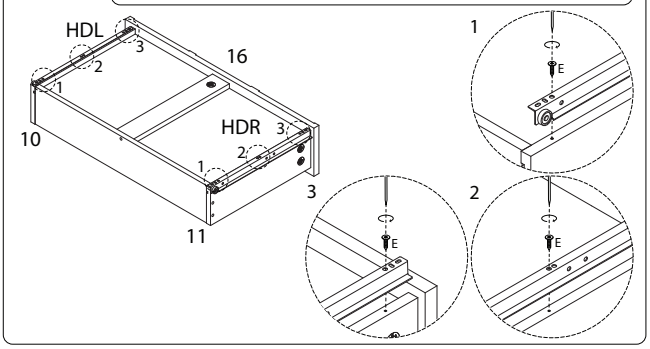

21

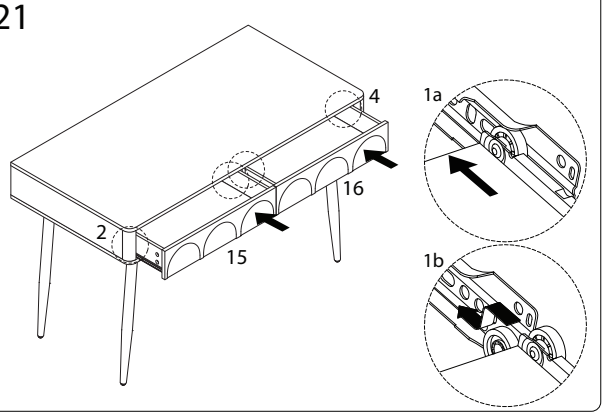

22

D	J3	K
M4 x 35		
x 1	x 1	x 1

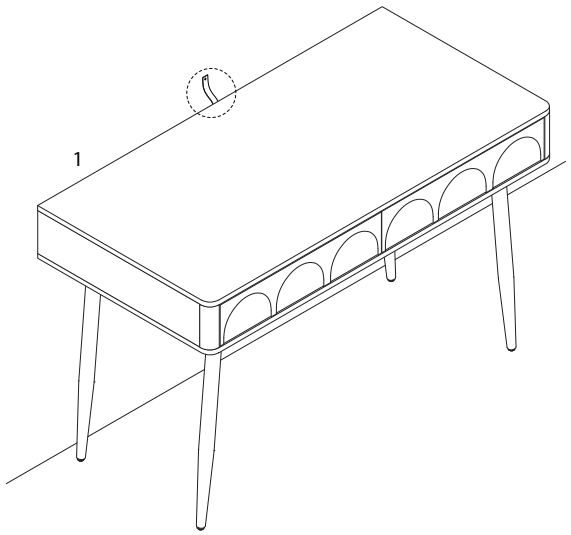

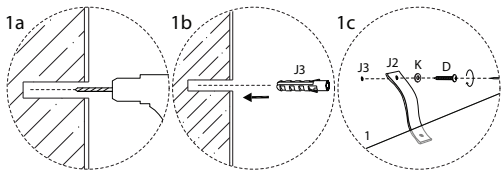

2696/ESLANE/150526/