# YILA

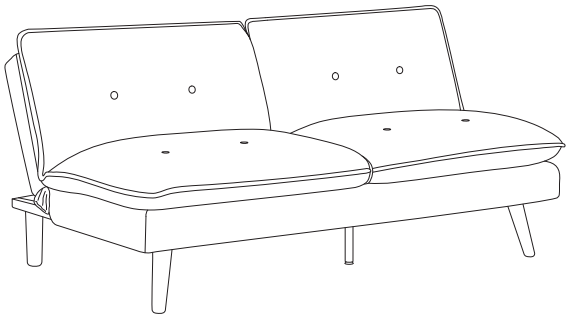

1/6

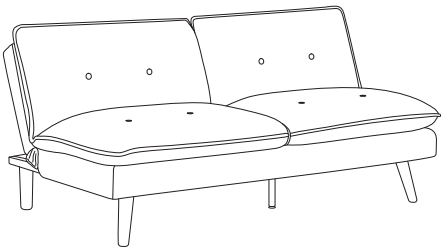

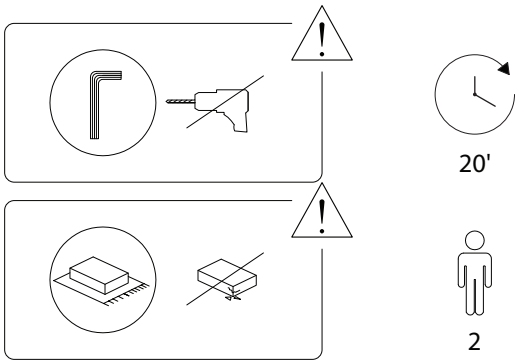


2/6



| A | B | C | D |
|---|---|---|---|
|  |  |  |  |
| x 1 | x 2 | x 2 | x 1 |

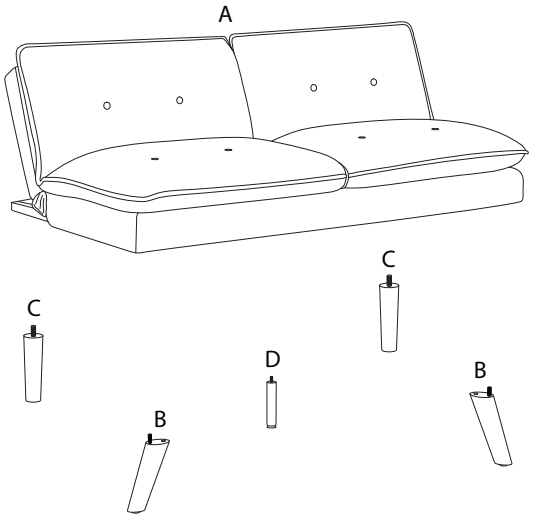


| E | F | G | H |
|---|---|---|---|
|  M8 x 67 |  |  |  |
| x 2 | x 2 | x 1 | x 3 |

3/6



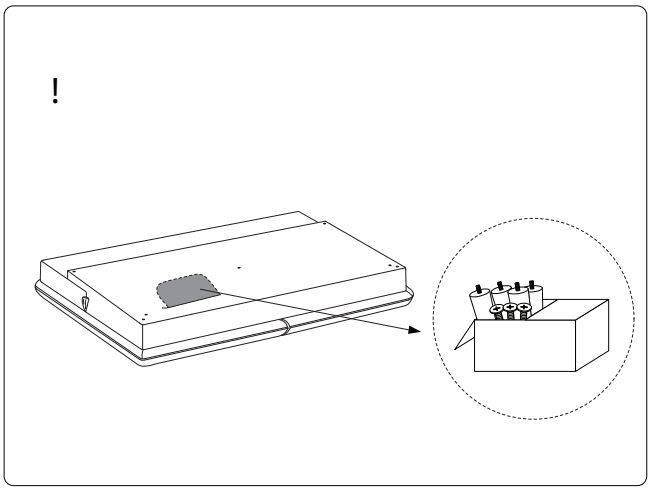


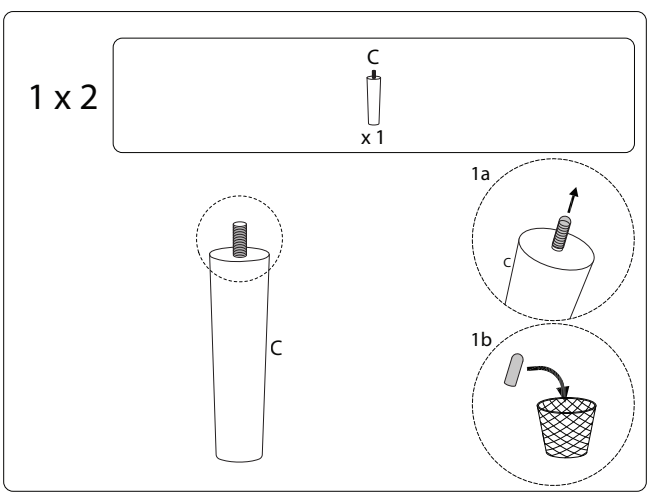


4/6

## 2

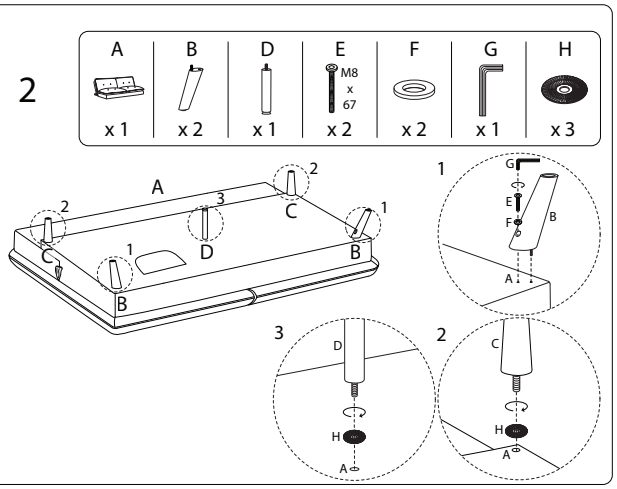
A
B
D
E
M8
x
67
F
G
H
x 1
x 2
x 1
x 2
x 2
x 1
x 3
A
B
C
D
1
2
3
1
G
E
F
B
A
2
C
H
A
3
D
H
A

## !

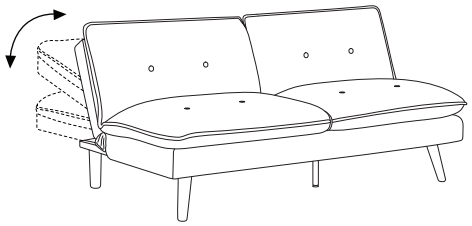

## 3

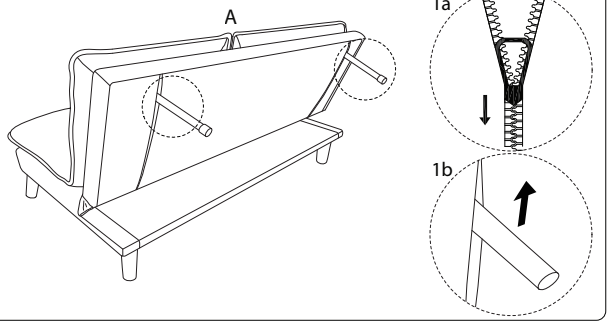
A
1a
1b