ADELAIDE

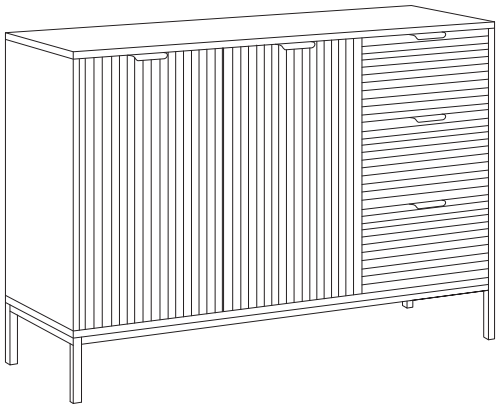

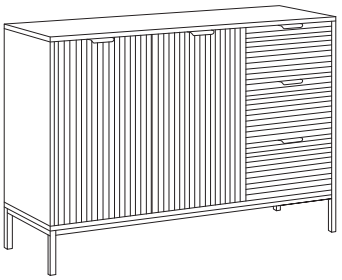

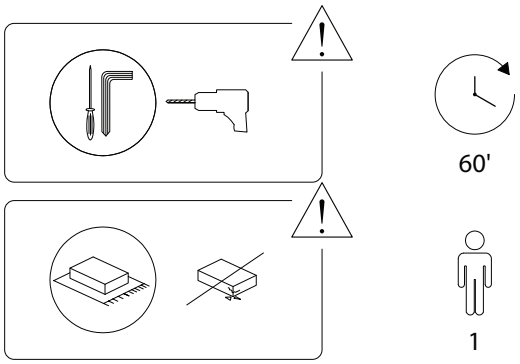

1/18

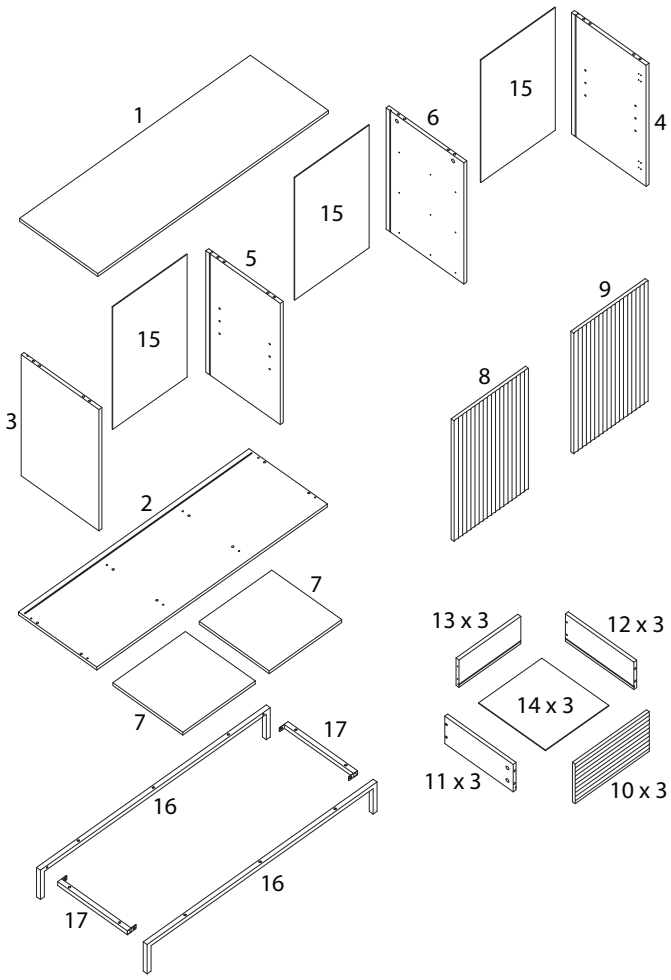

2/18

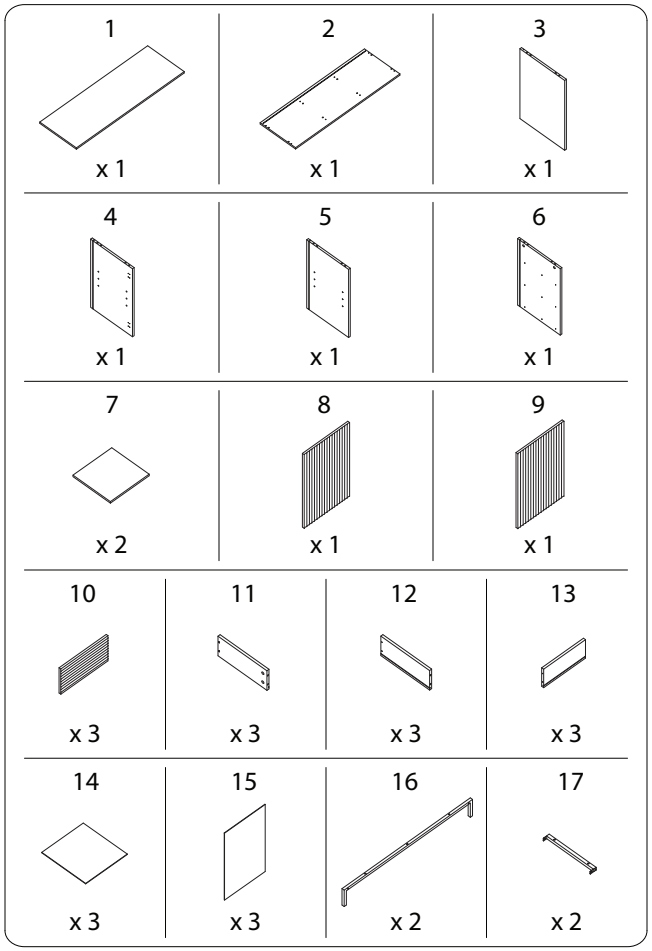

3/18

A	B	C	CL
			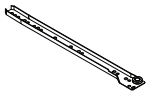
x 20	x 20	x 16	x 3
CR	**D**	**DL**	**DR**
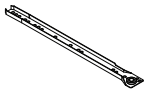	 M4 x 40		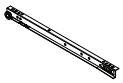
x 3	x 22	x 3	x 3
E	**F**	**G**	**H**
			
x 2	x 2	x 16	x 1
I	**J**	**K**	**L**
	 M3.5 x 12		
x 5	x 76	x 12	x 8

M	N	O	P	Q
 M6 x 12	 M6 x 30	 M4 x 14		
x 4	x 10	x 2	x 2	x 2

1

1	A
 x 1	 x 8

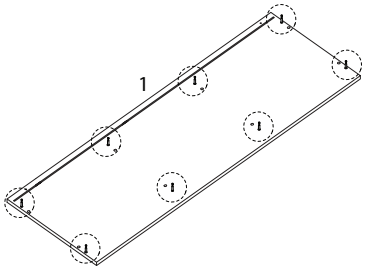

2

6	CL	J
 x 1	 x 3	M3.5 x 12 x 9

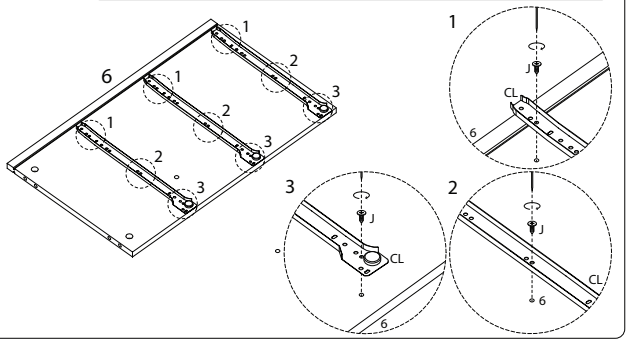

3

4	CR	J
 x 1	 x 3	 M3.5 x 12 x 9

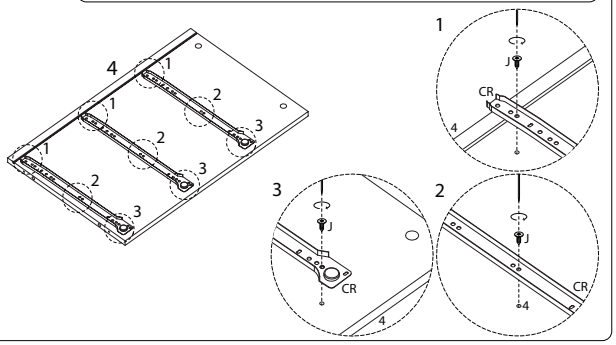

5

B
 x 8

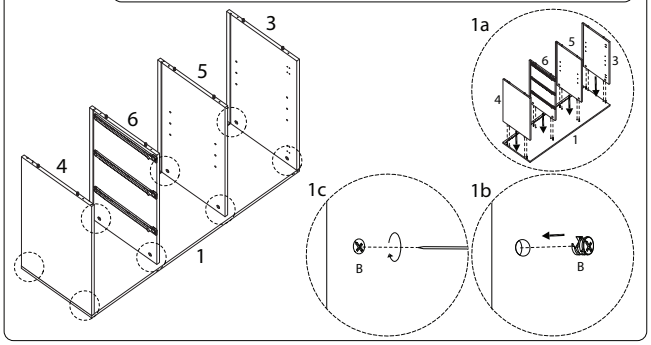

4

3	5	C
 x 1	 x 1	 x 16

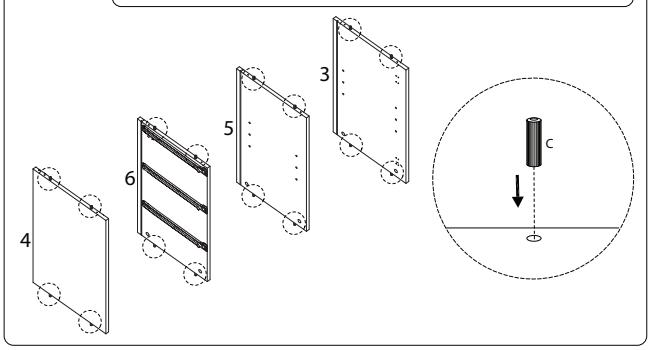

6

G
 x 4

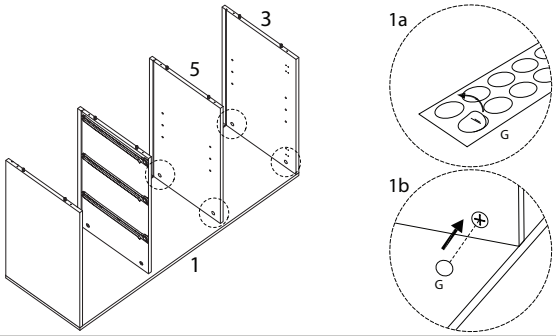

7

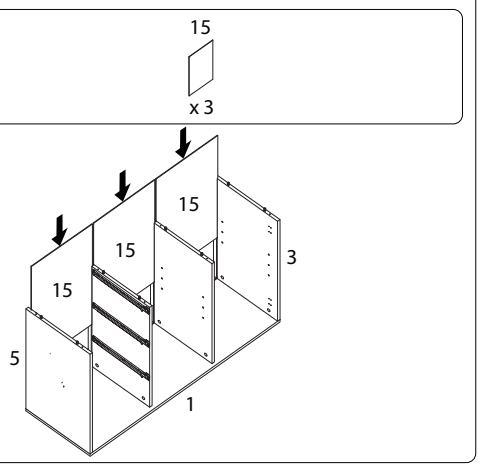

8

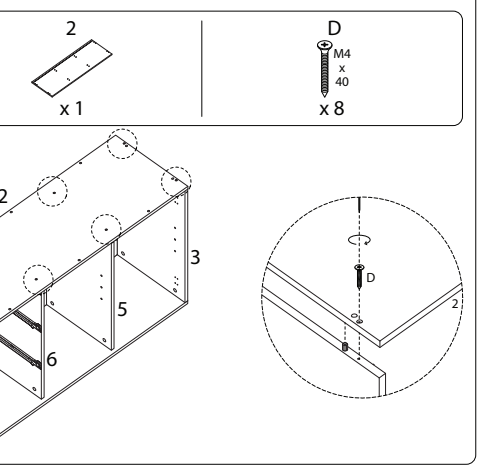

9

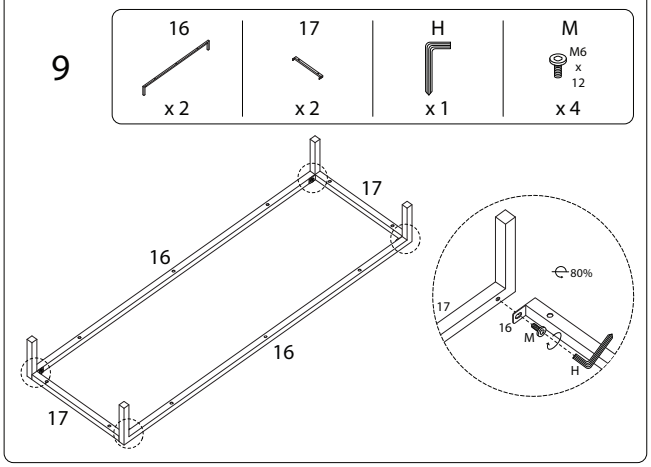

10

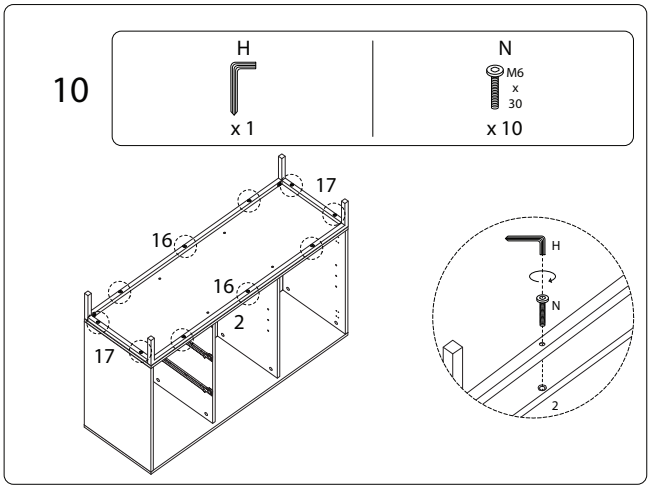

11

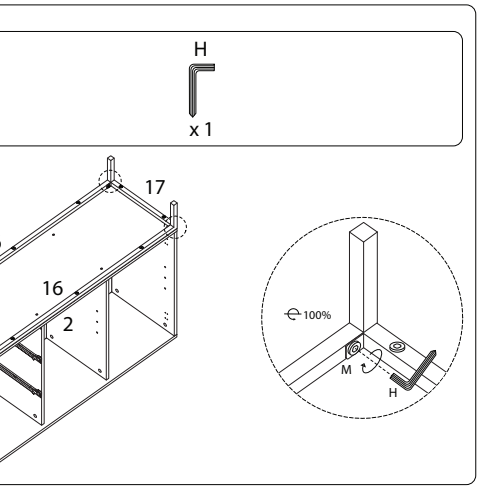

13 x 3

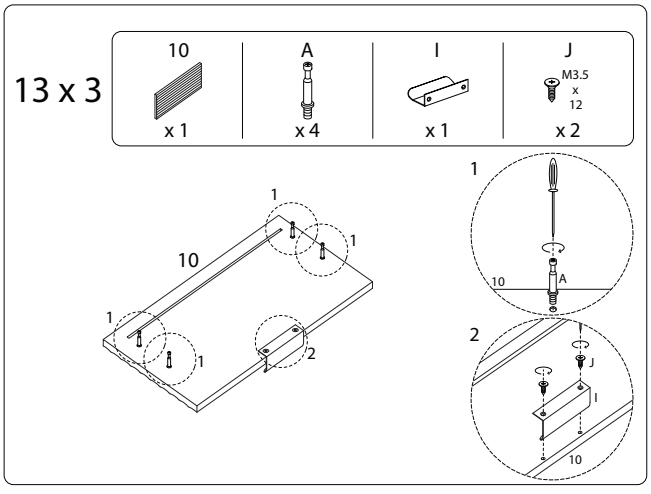

12

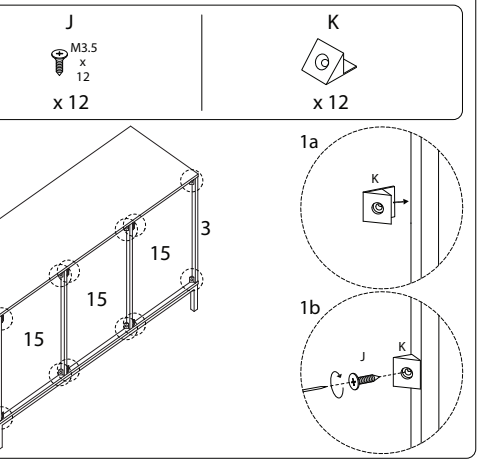

14 x 3

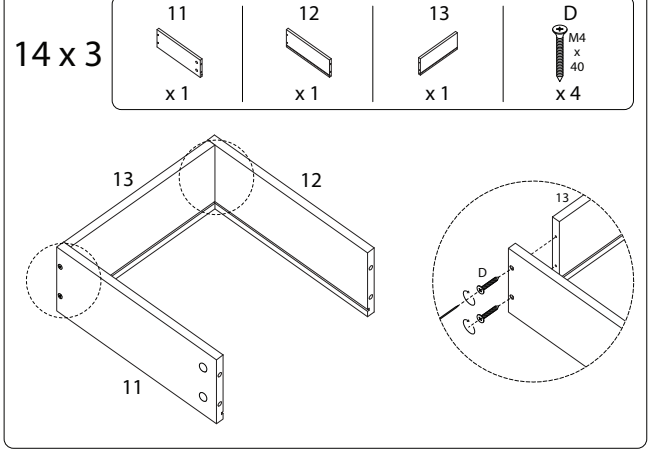

13 x 3

14

x 1

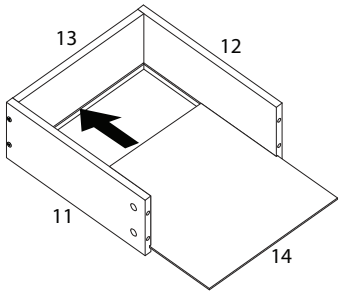

14 x 3

B

x 4

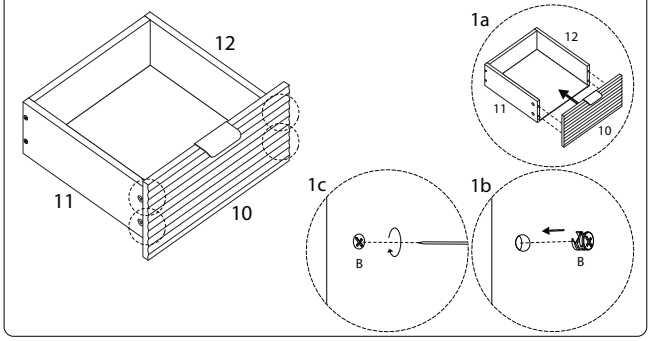

15 x 3

G

x 4

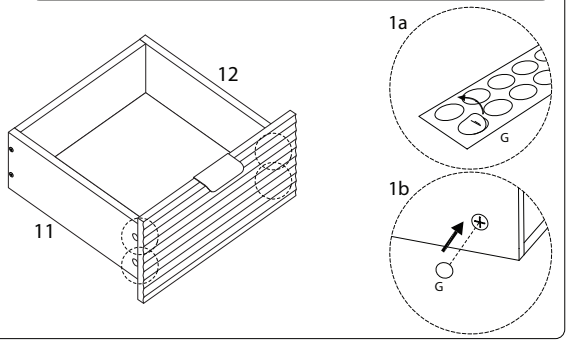

16 x 3

DL

x 1

DR

x 1

J

M3.5 x 12

x 4

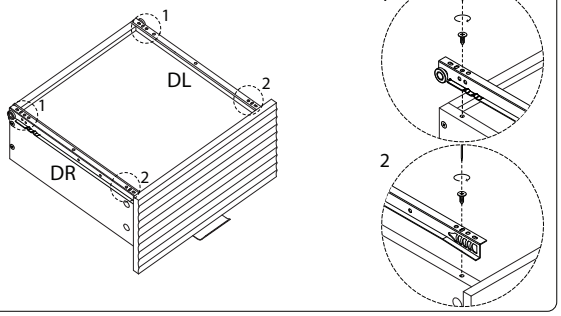

17

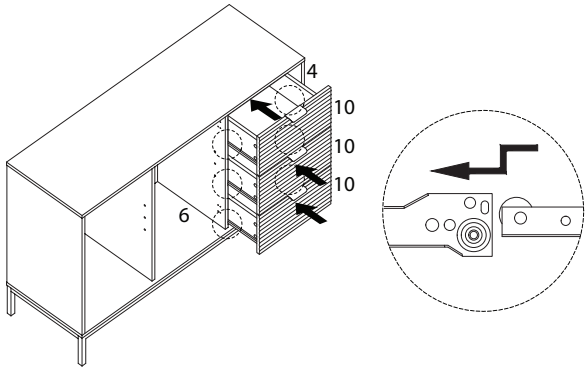

18

L

x 8

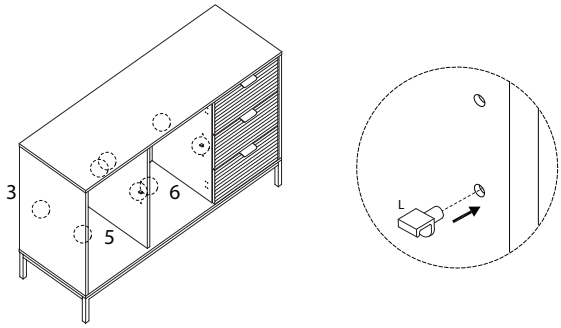

19

7

x 2

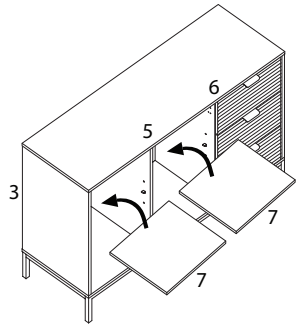

20

8

x 1

9

x 1

E

x 2

F

x 2

I

x 2

J

M3.5 x 12

x 12

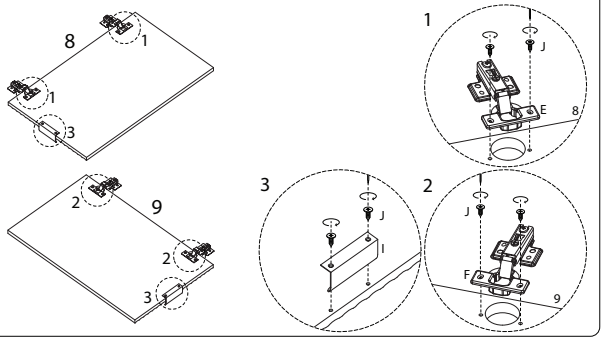

21

J

M3.5 x 12

x 16

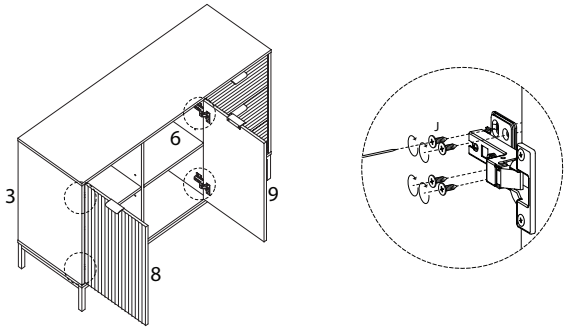

16/18

1794/ADELAIDE/081025/

!

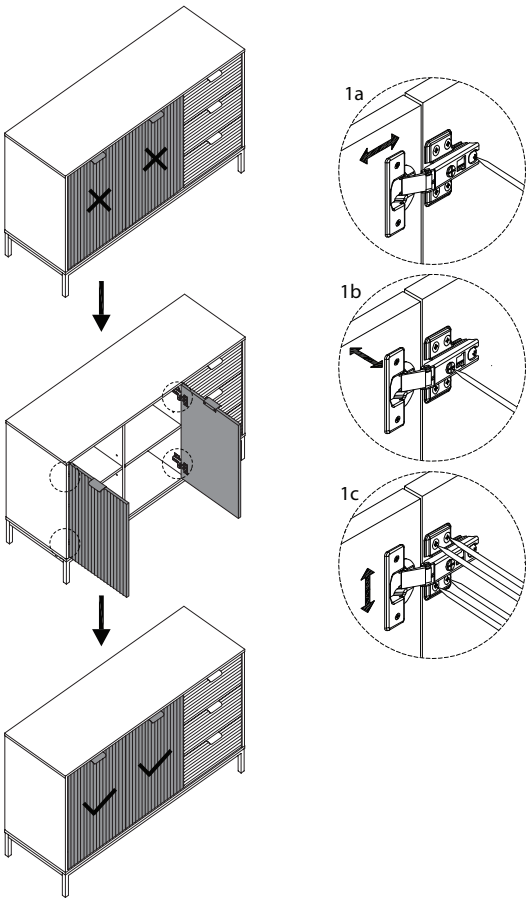

17/18

1794/ADELAIDE/081025/

22

O

M4 x 14

x 2

Q

x 2

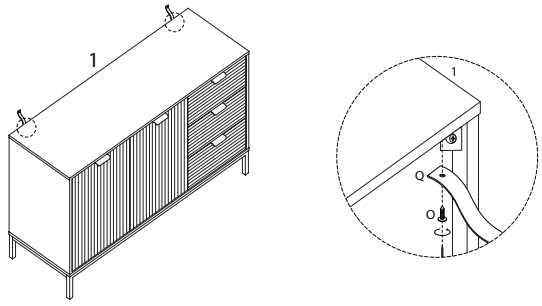

23

D

M4 x 40

x 2

P

x 2

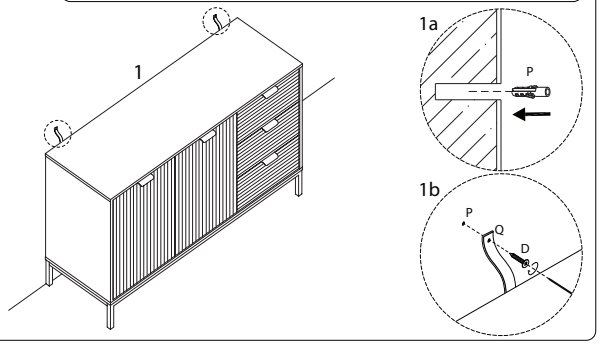

18/18

1794/ADELAIDE/081025/