07.07.2020	M3

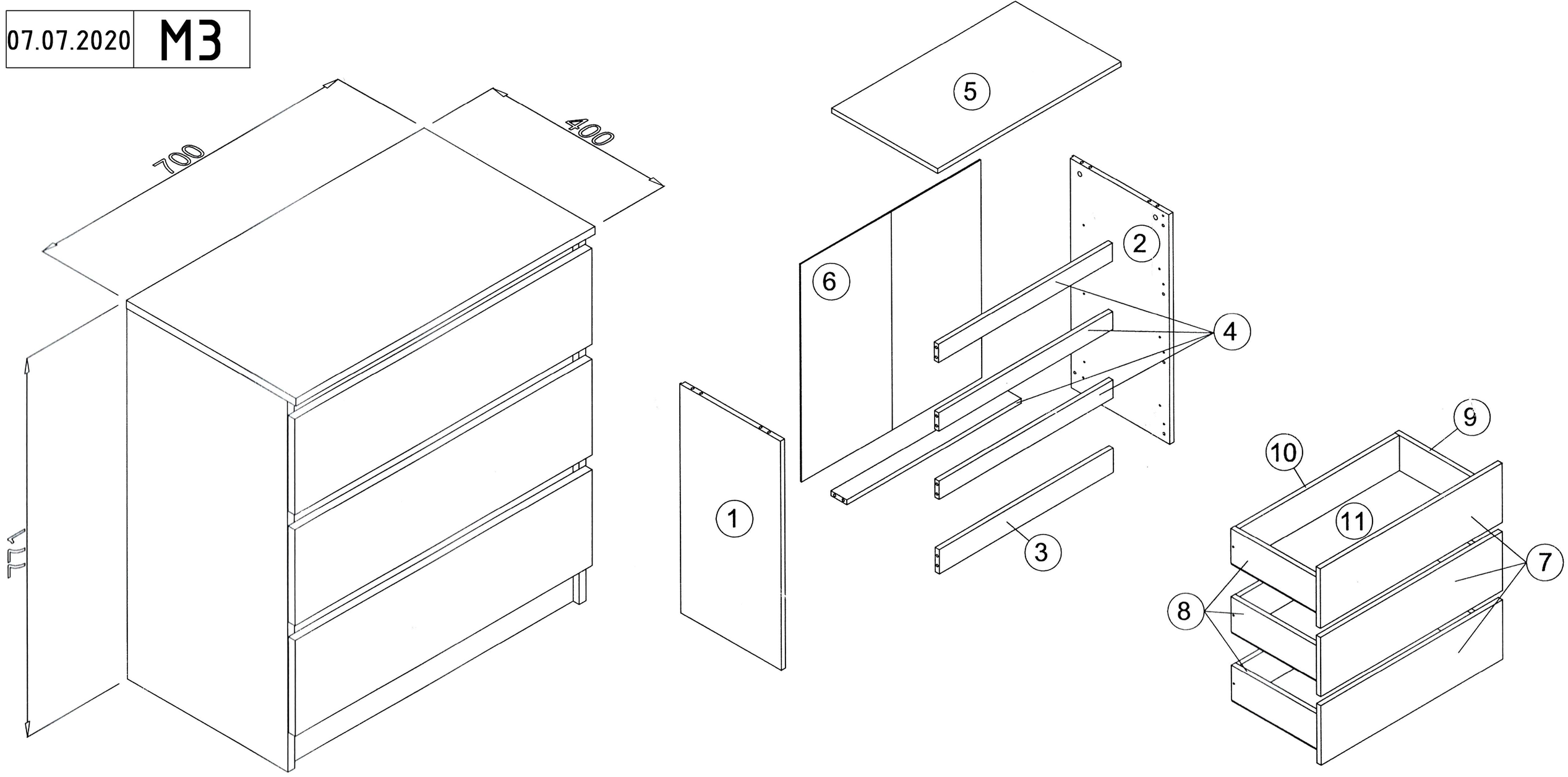

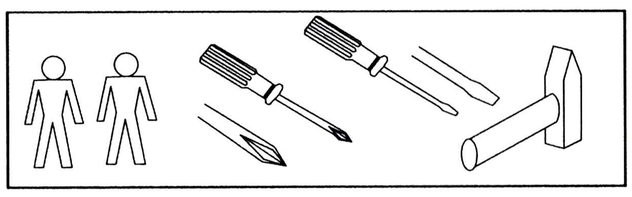

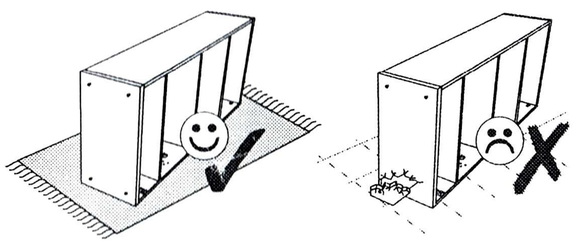

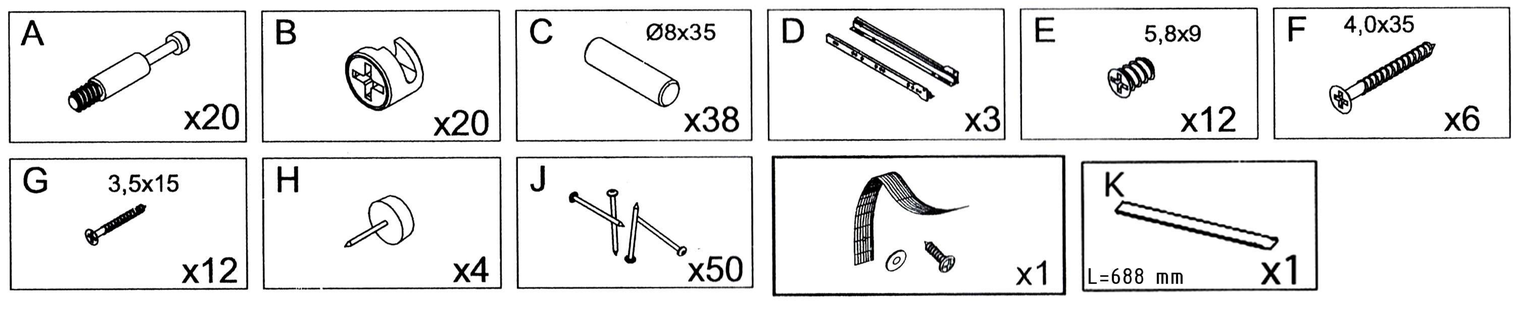

1

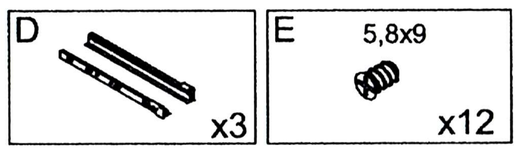

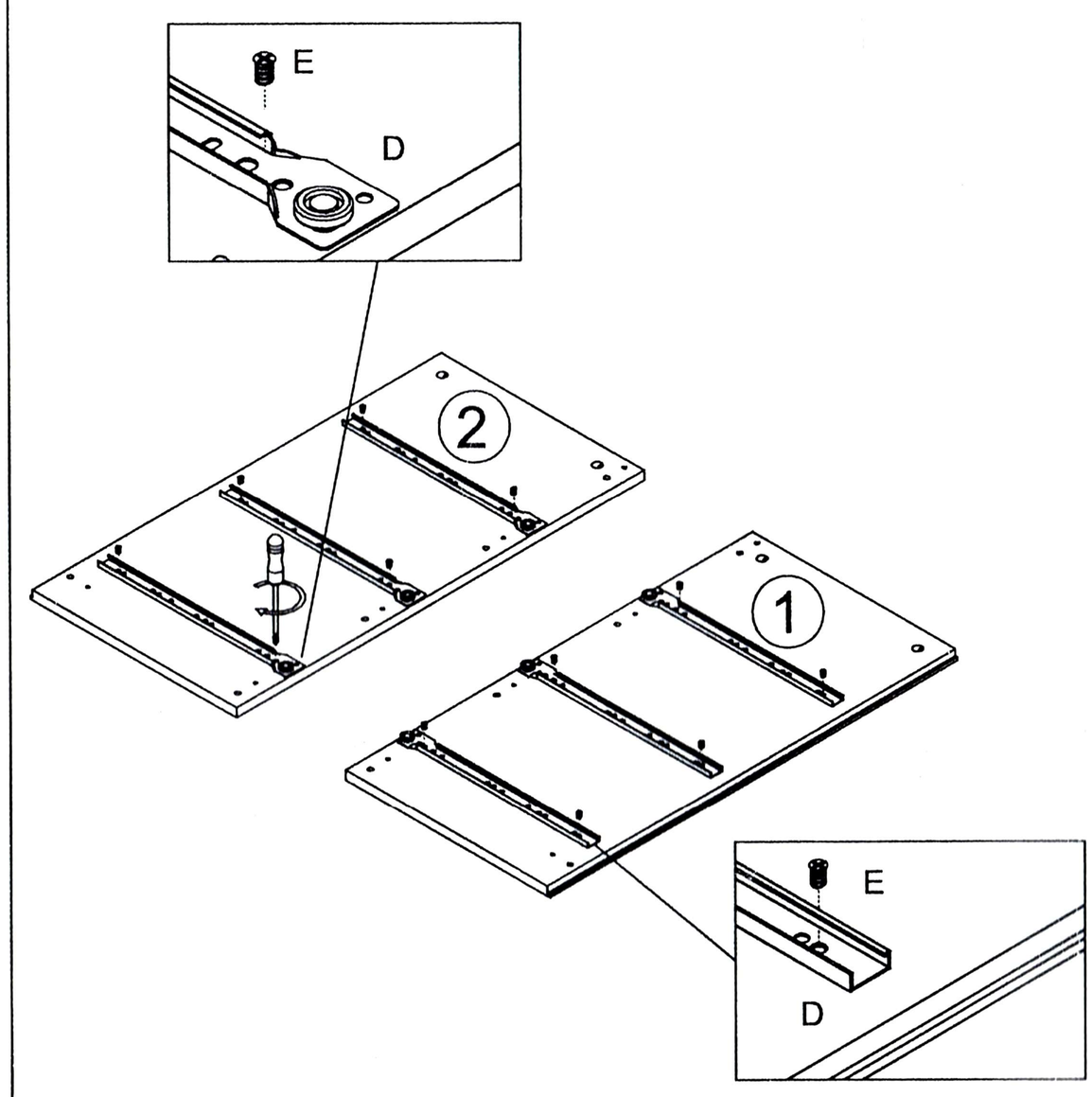

2

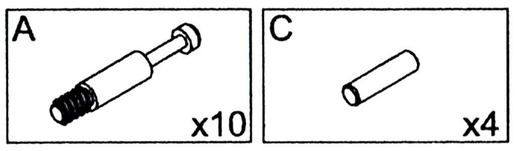

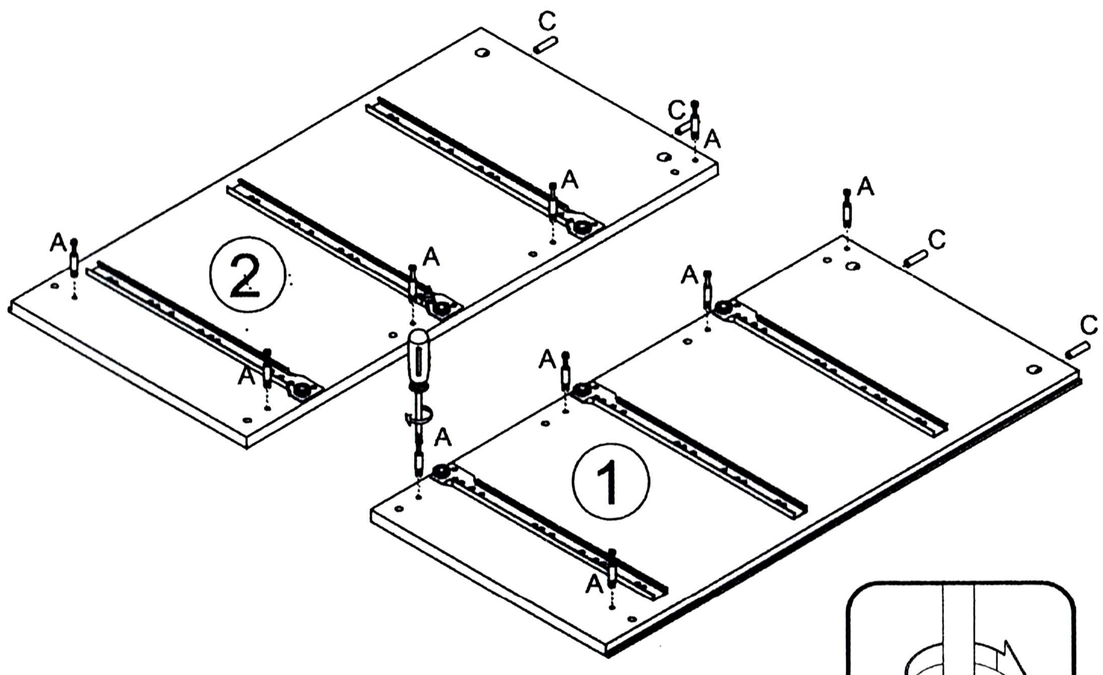

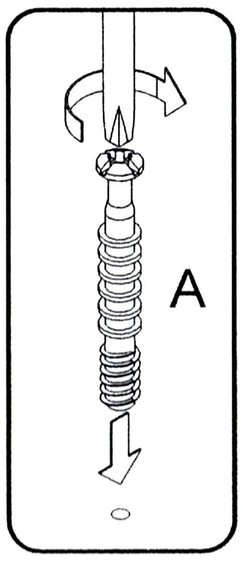

3

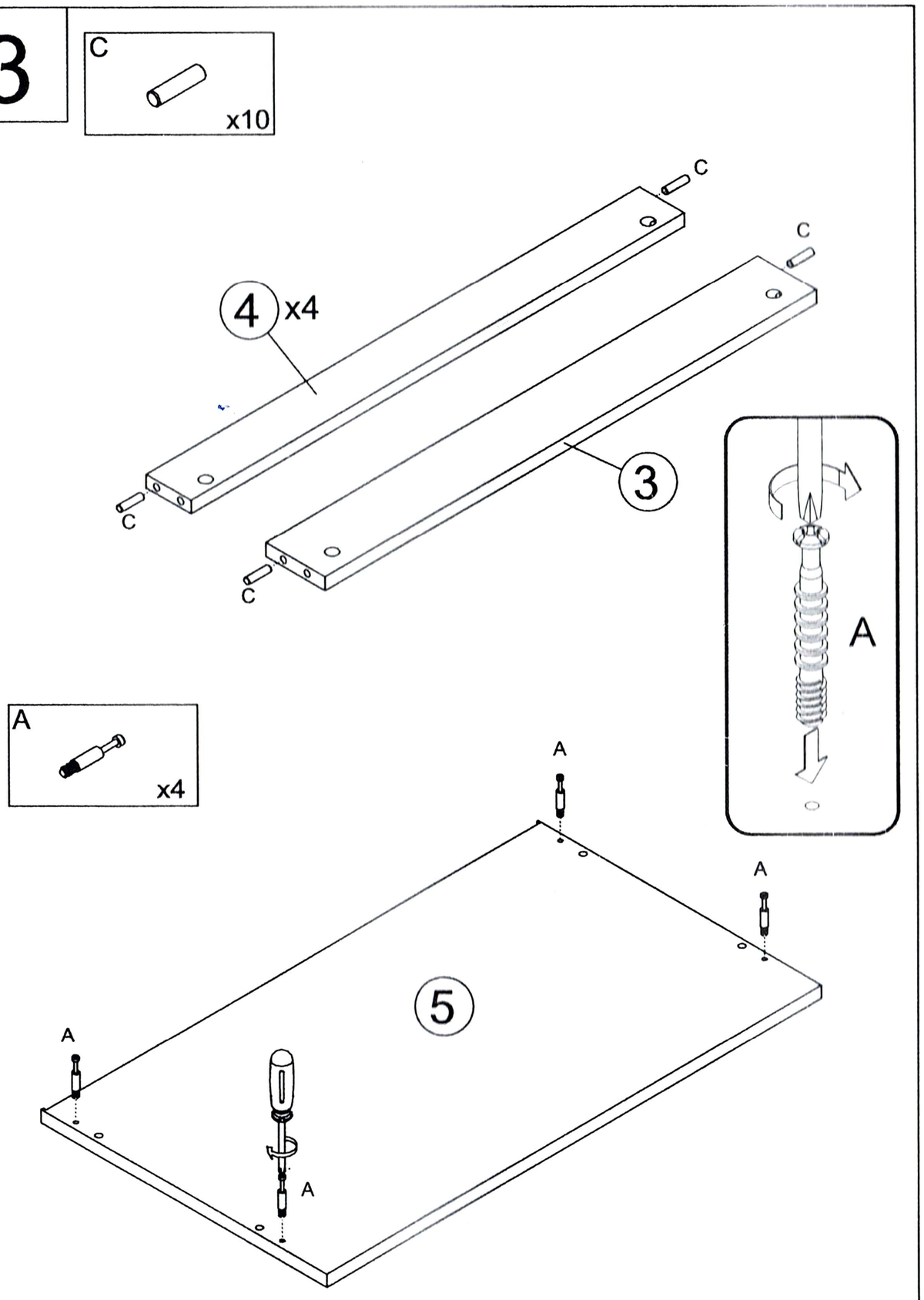
C
x10
C
C
4
x4
3
C
C
A
x4
A
A
A
A
5

4

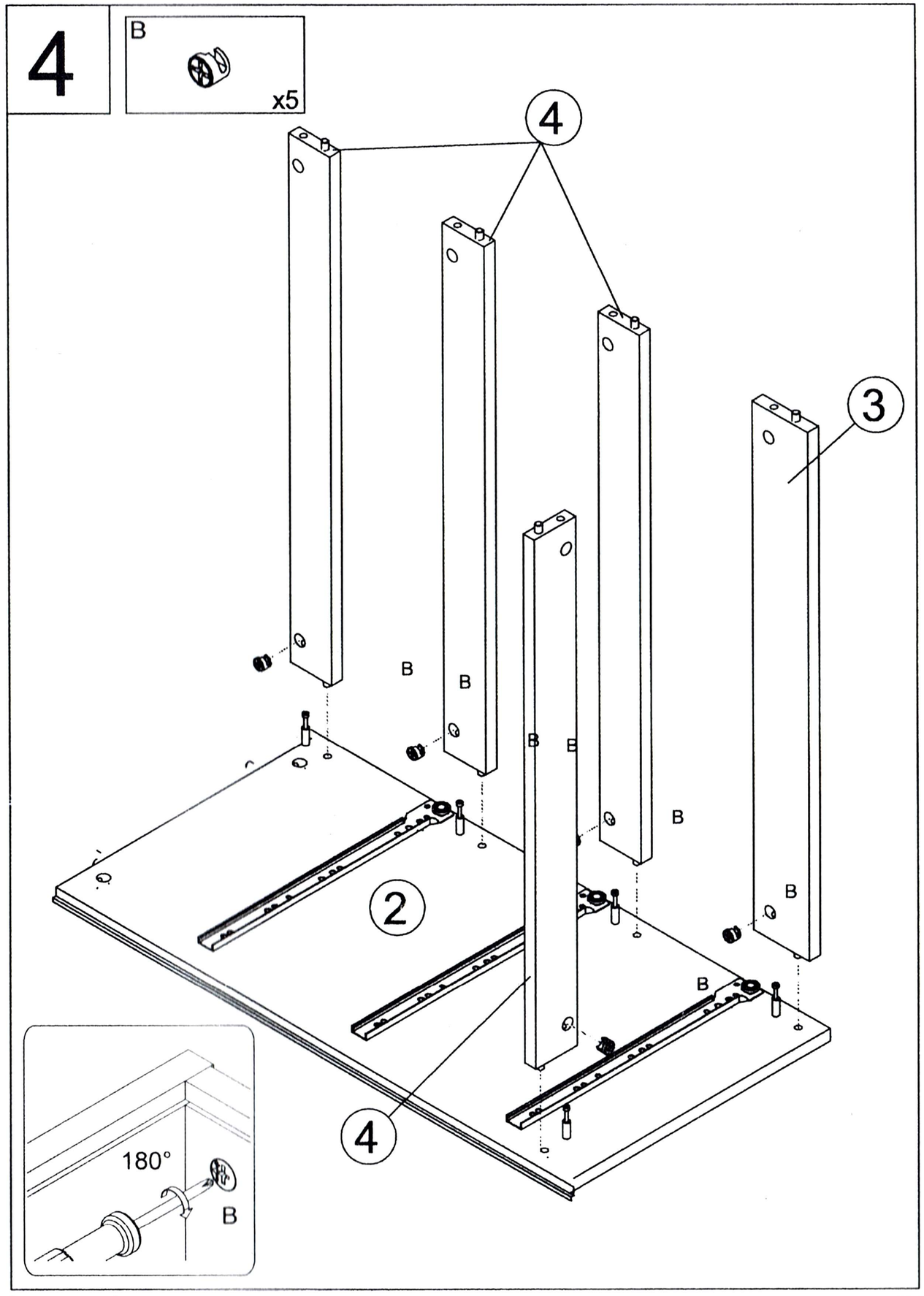
B
x5
4
3
B
B
B
B
B
B
B
2
B
4
180°
B

5

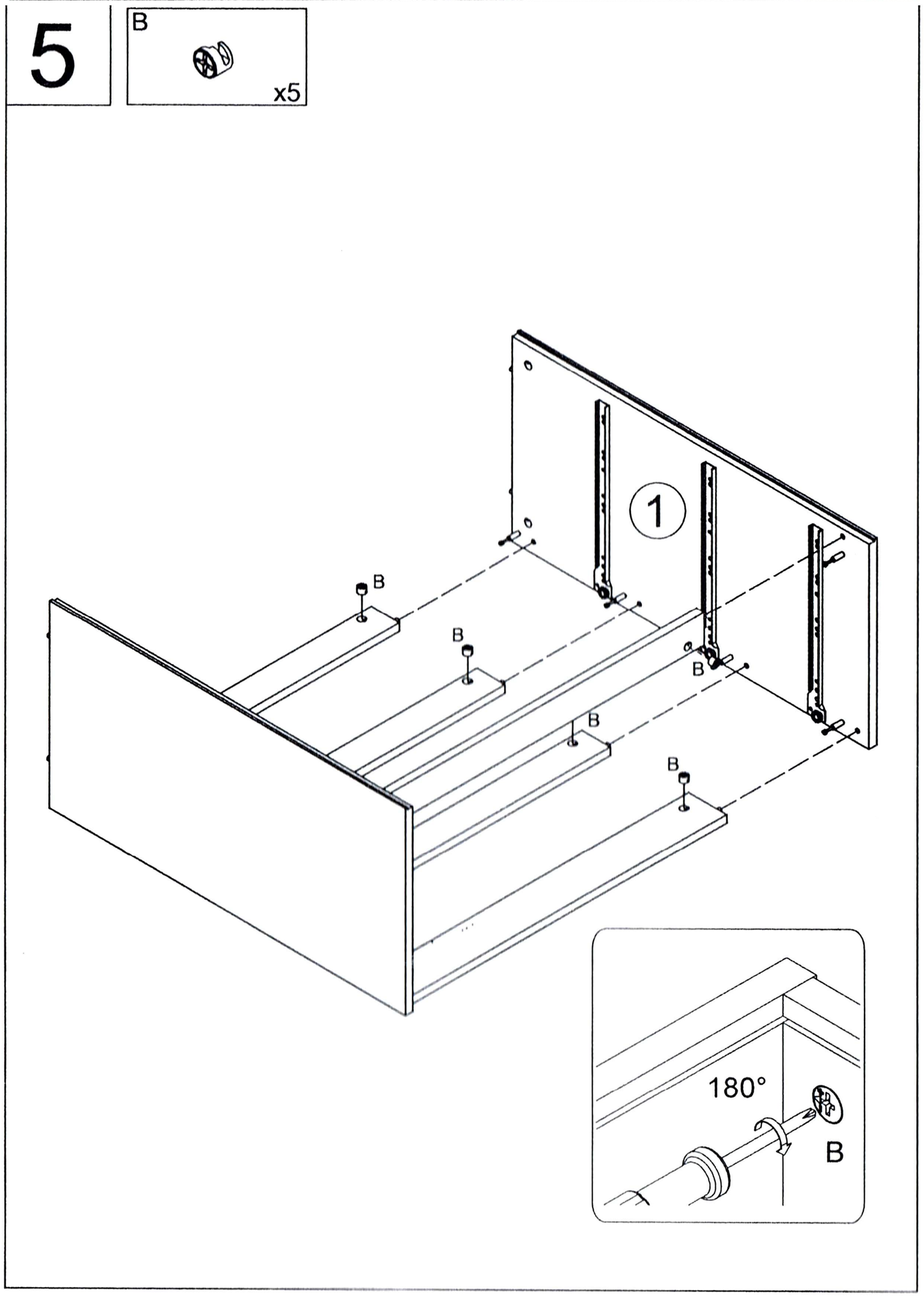
B
x5
1
B
B
B
B
B
180°
B

6

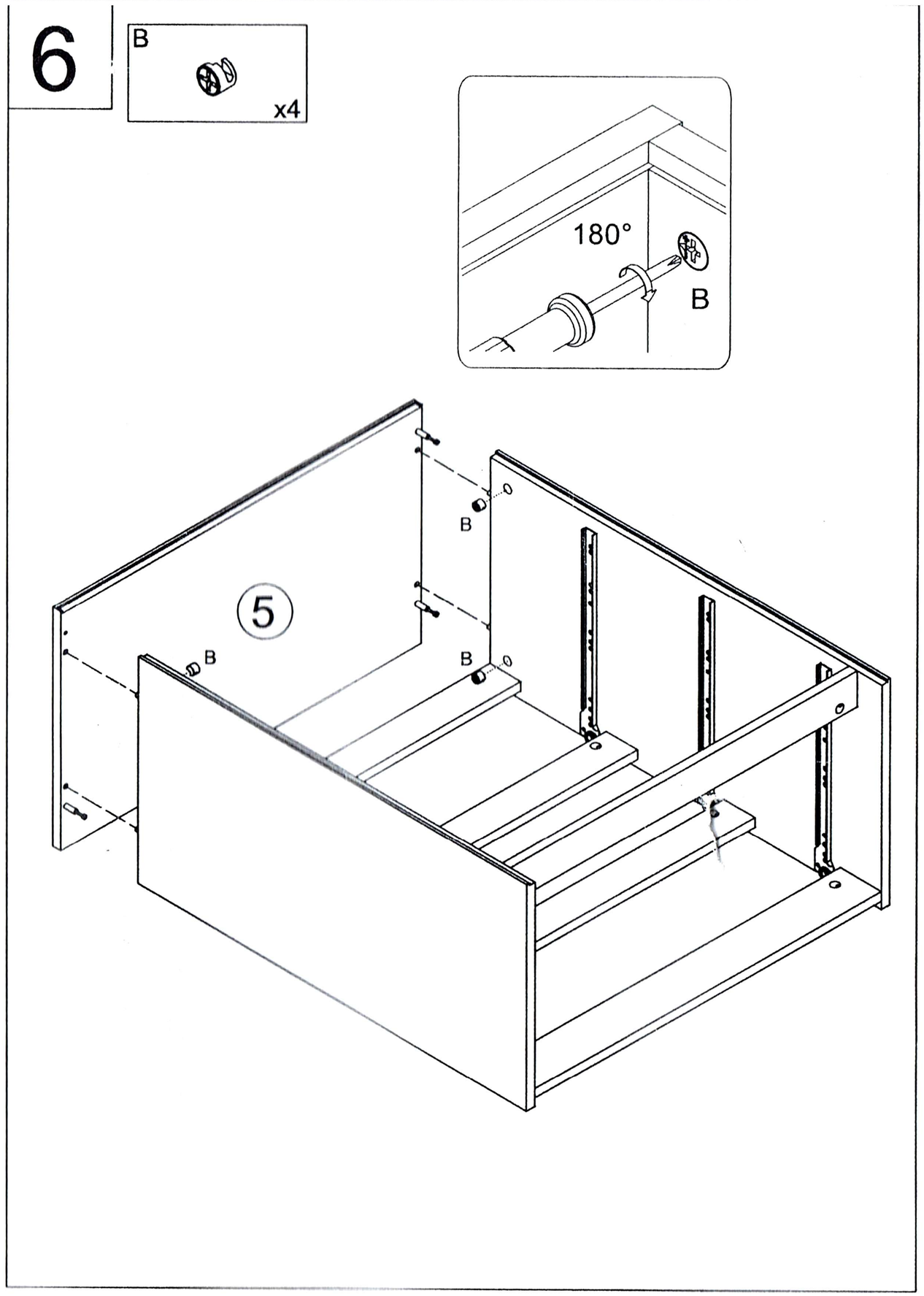
B
x4
180°
B
B
5
B
B

7

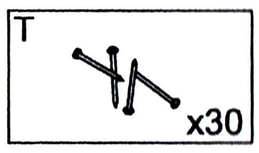
T
x30

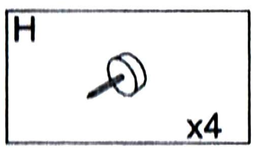
H
x4

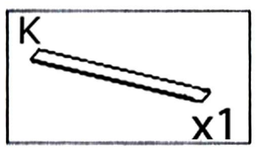
K
x1

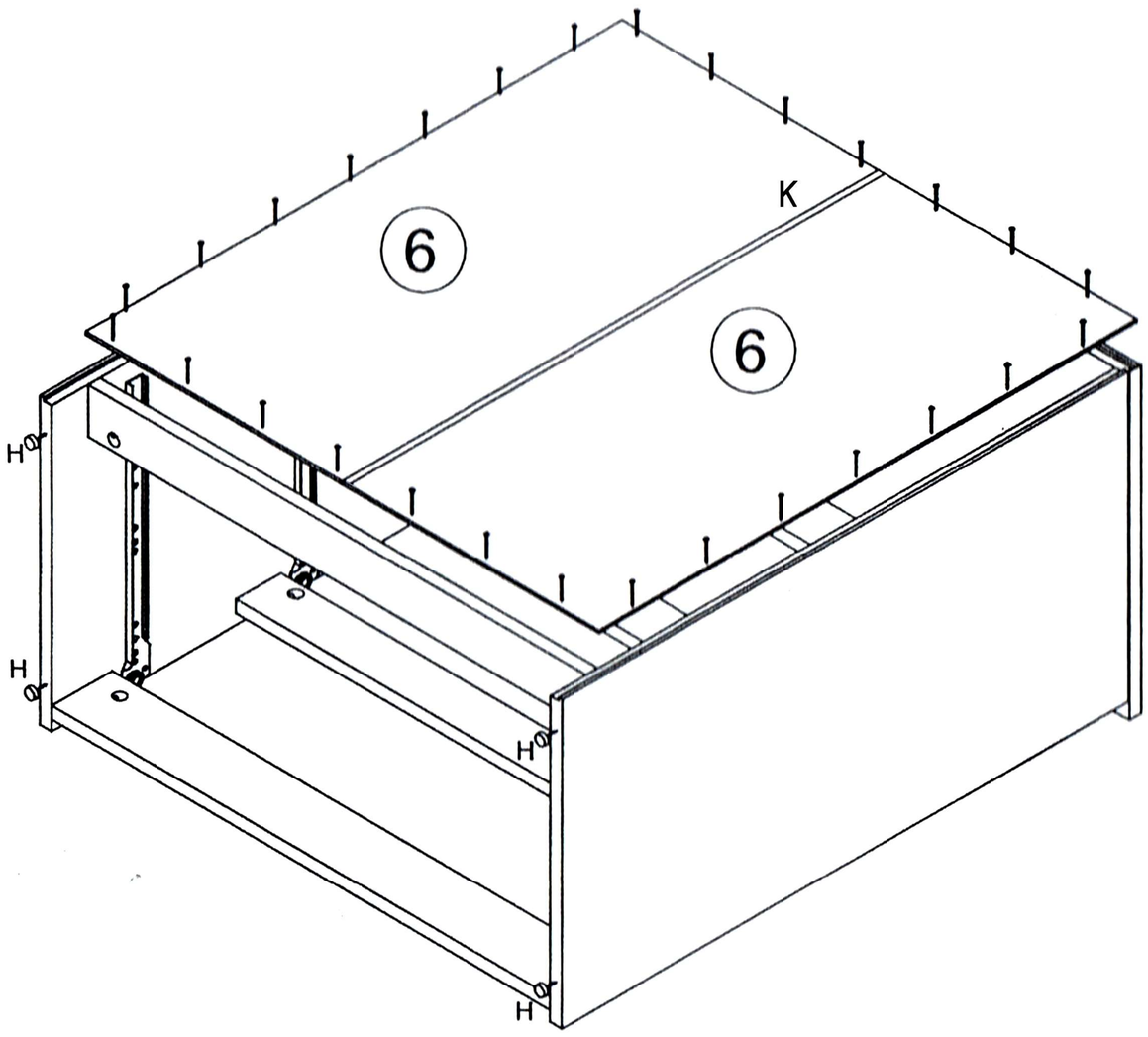
6
K
6
H
H
H
H

8

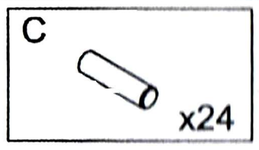
C
x24

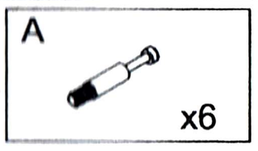
A
x6

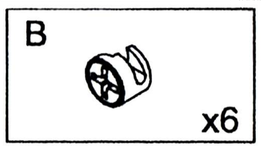
B
x6

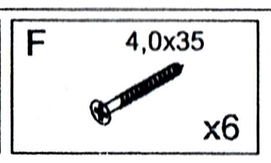
F
4,0x35
x6

x3

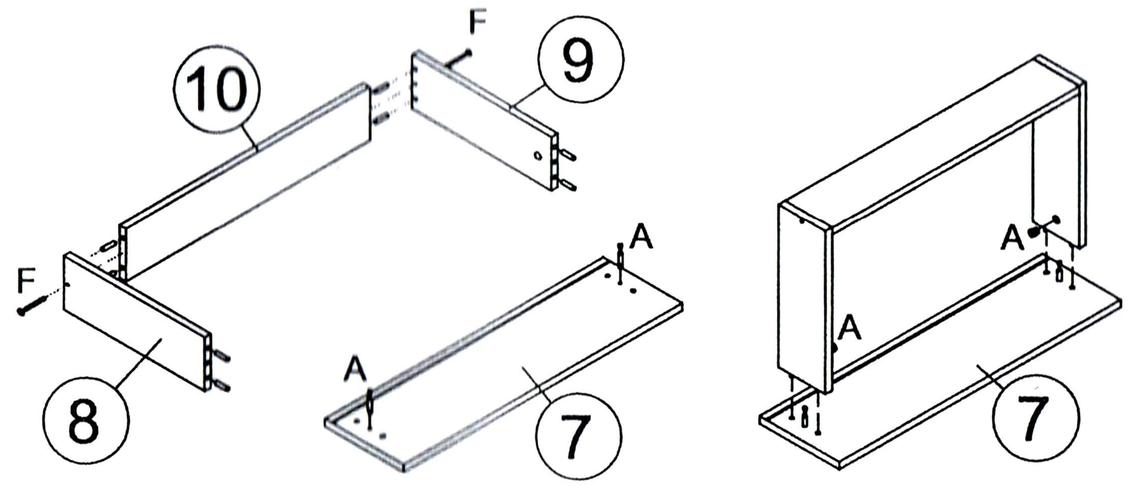
10
F
9
F
8
A
A
7
A
A
7

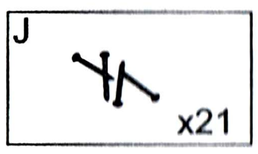
J
x21

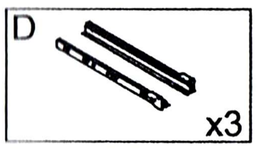
D
x3

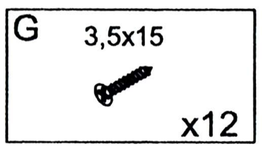
G
3,5x15
x12

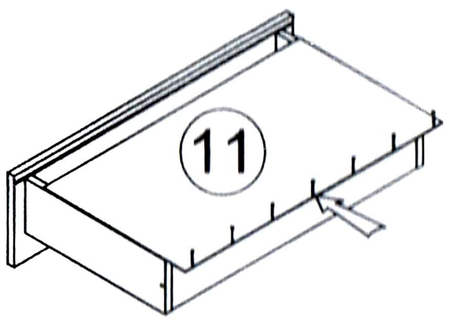
11

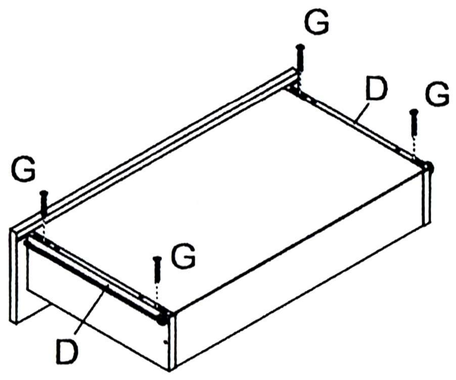
G
D
G
G
G
D

9

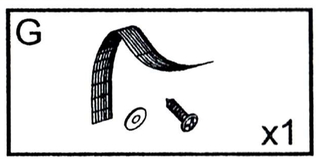
G
x1

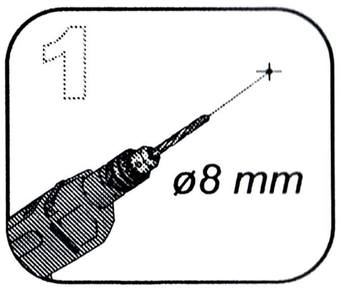
1
ø8 mm

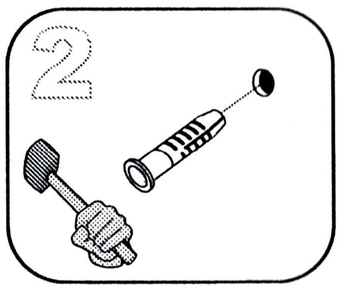
2

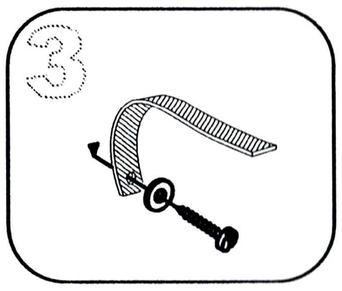
3

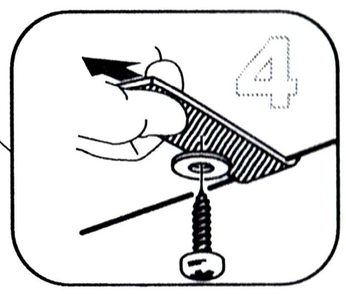
4

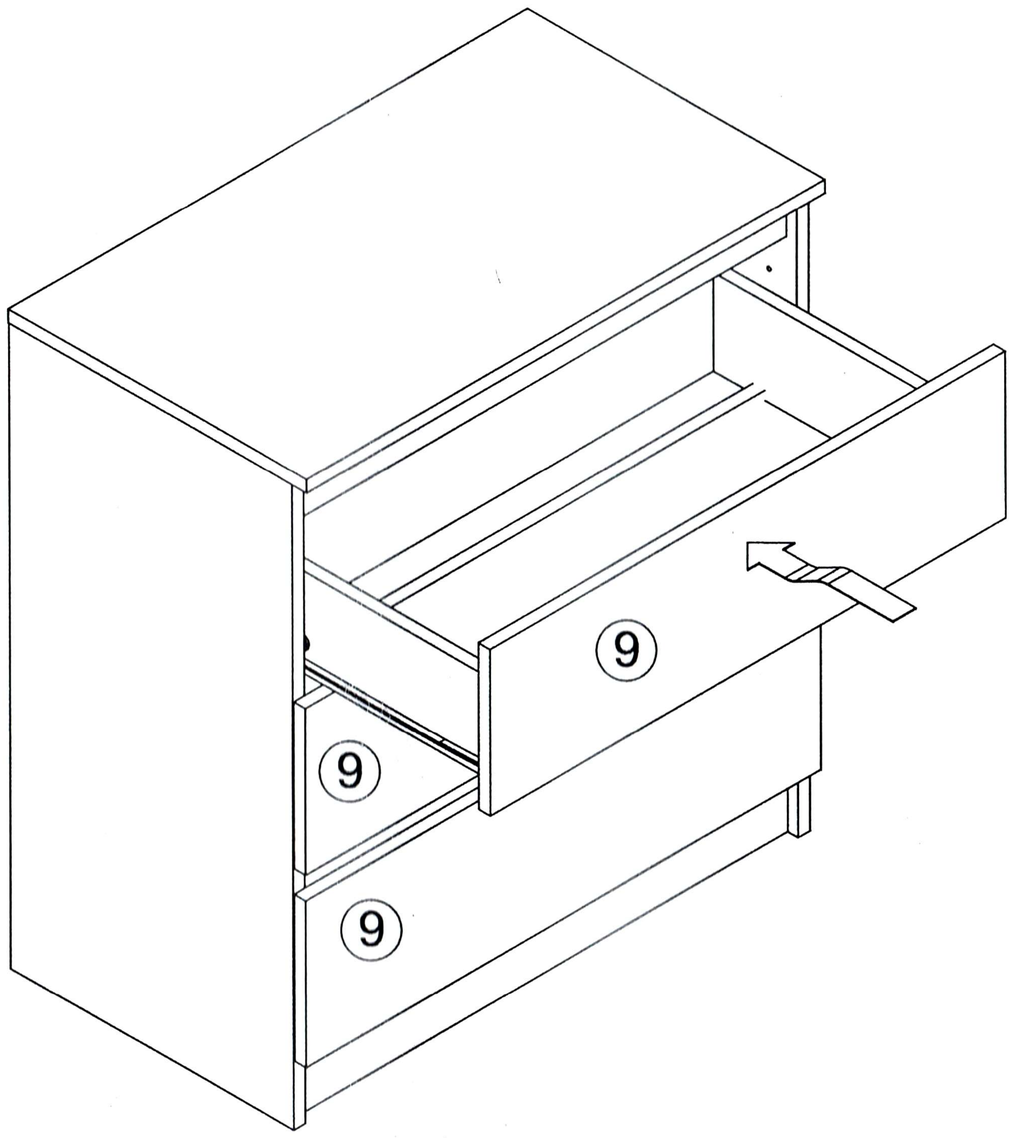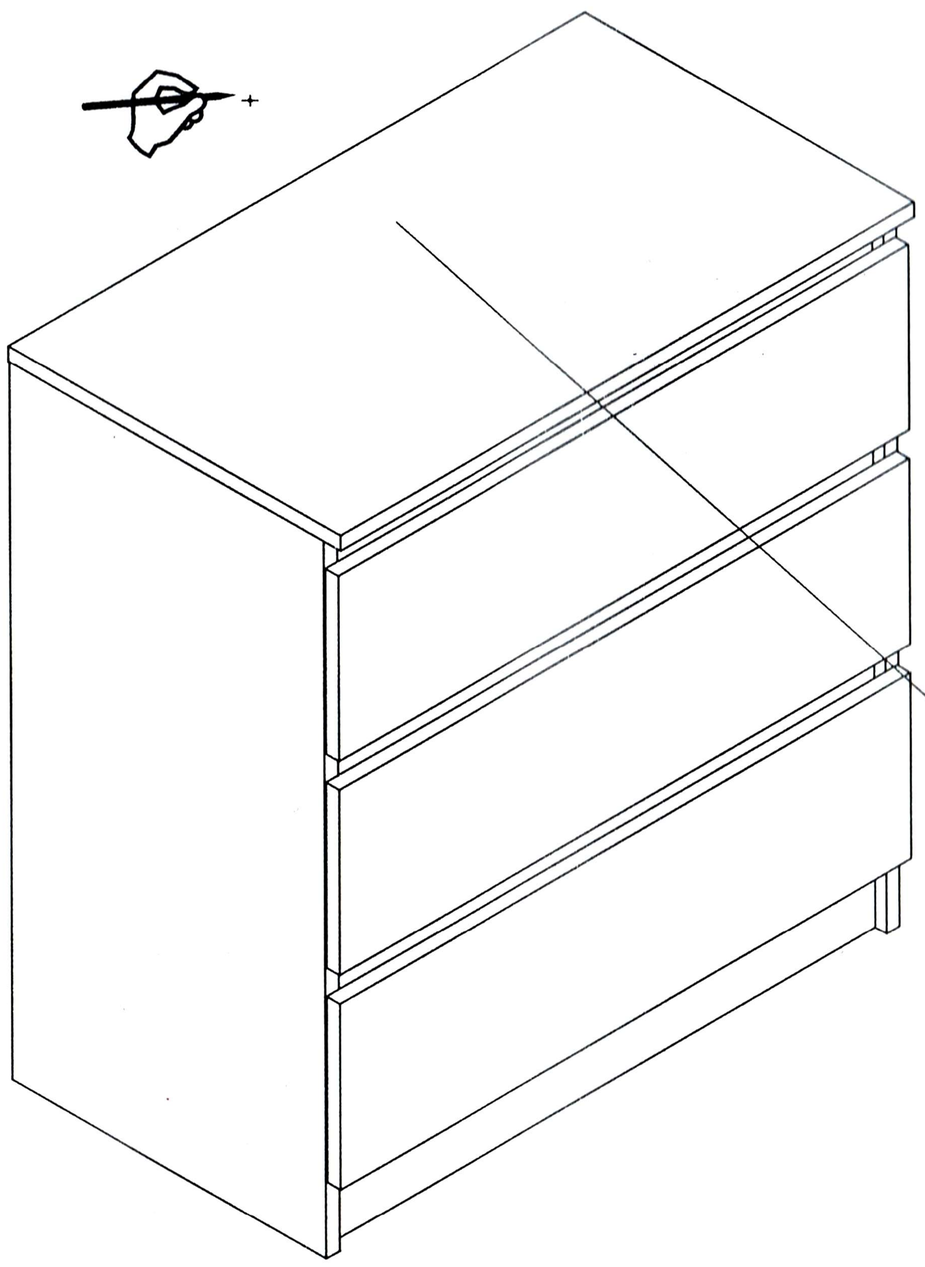
9
9
9