URUCU

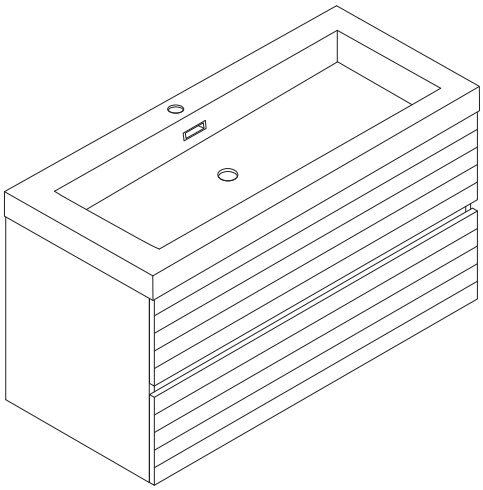

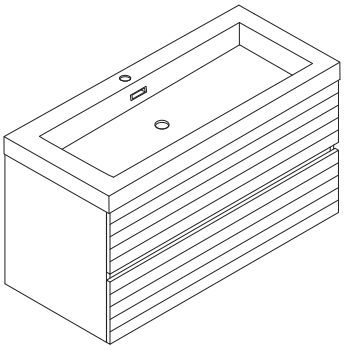

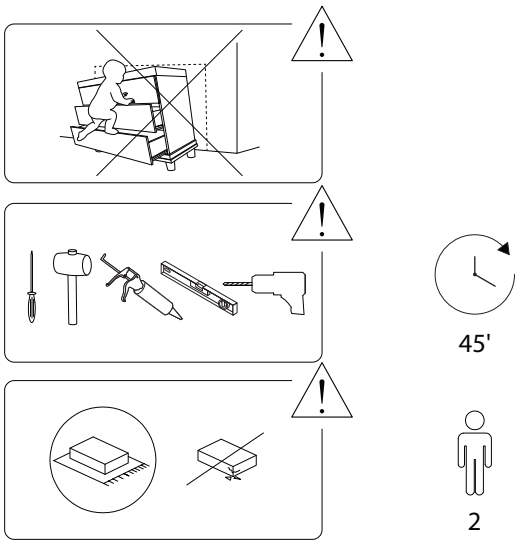

2354/URUCU-100/150925/

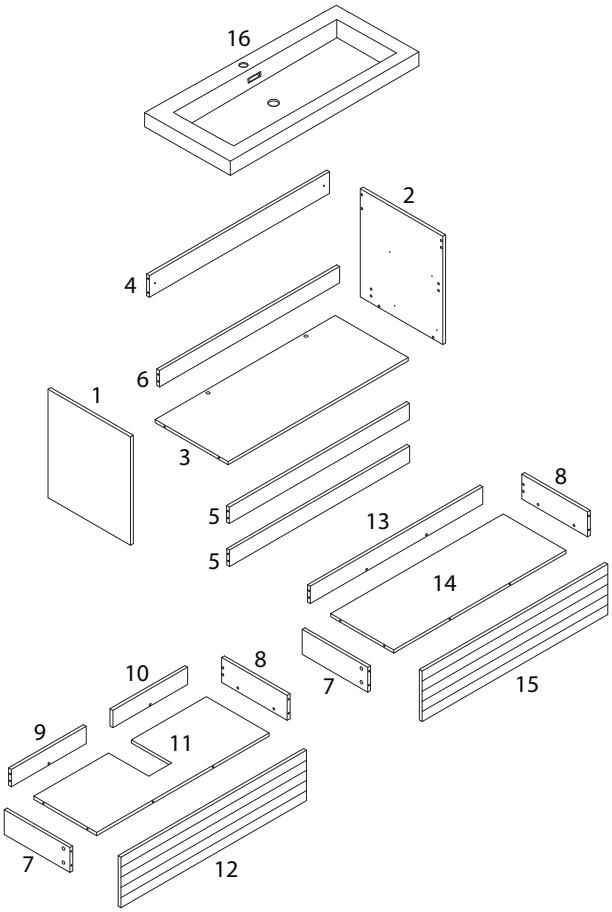

2354/URUCU-100/150925/

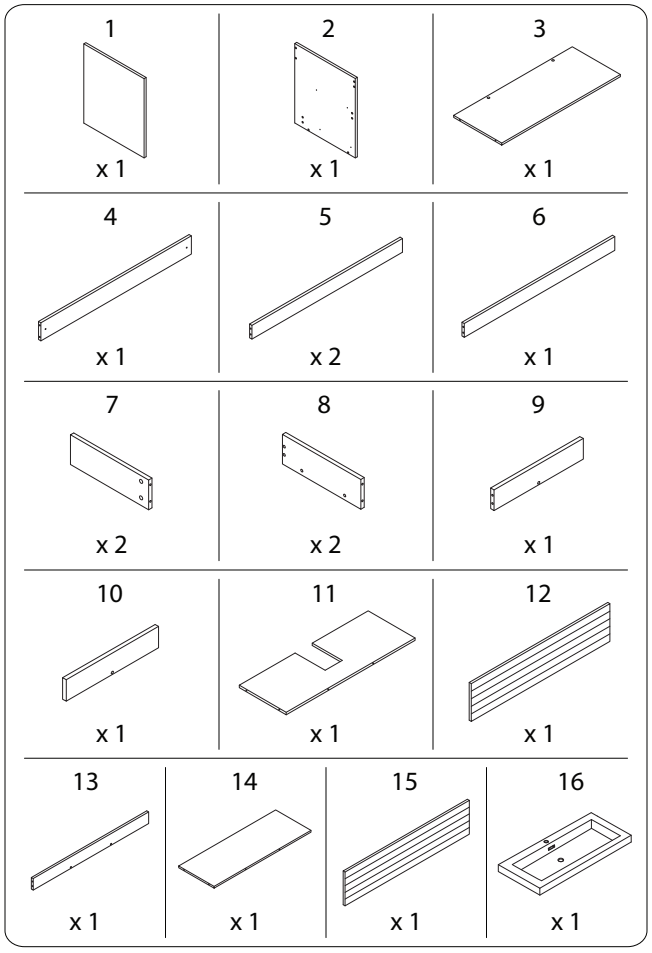

2354/URUCU-100/150925/

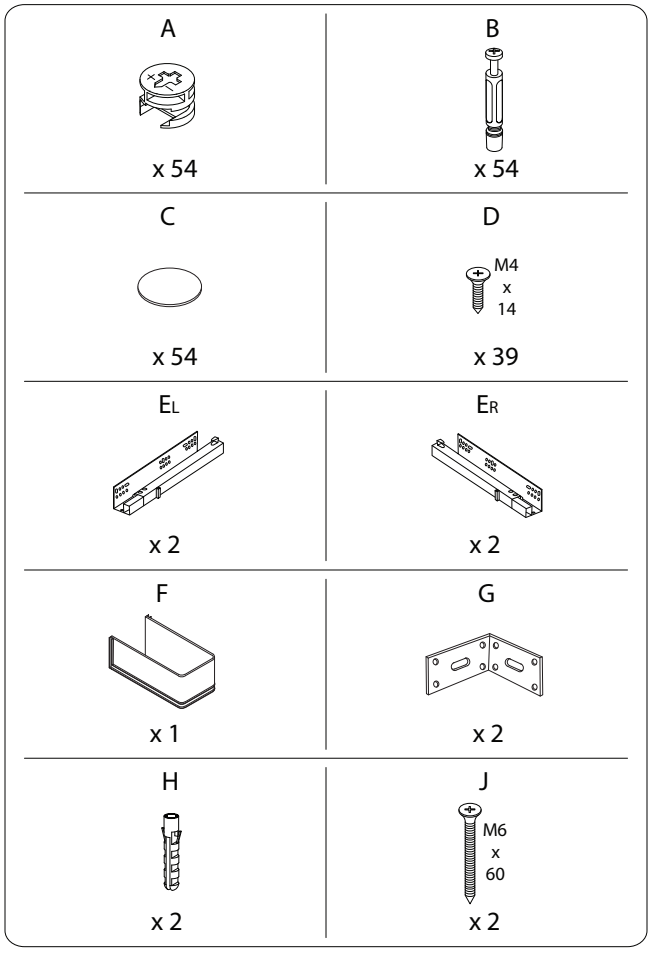
A
x 54
B
x 54
C
x 54
D
M4
x
14
x 39
EL
x 2
ER
x 2
F
x 1
G
x 2
H
x 2
J
M6
x
60
x 2

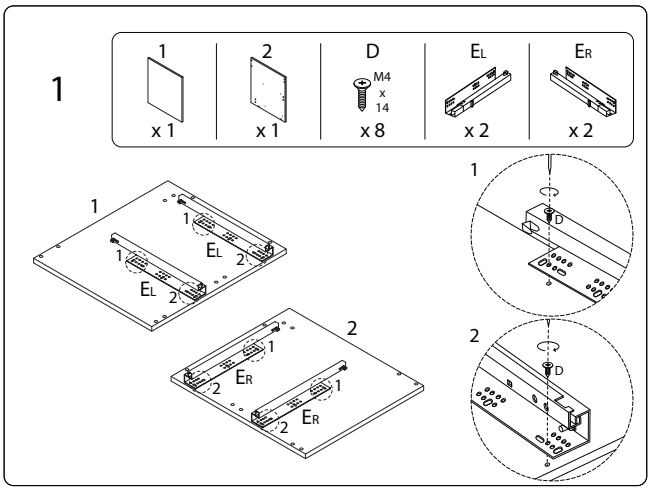
1
1
x 1
2
x 1
D
M4
x
14
x 8
EL
x 2
ER
x 2
1
EL
2
ER
D

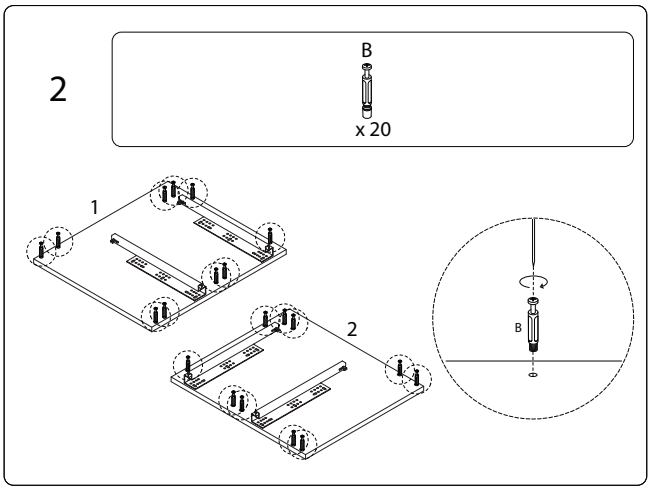
2
B
x 20
1
2
B

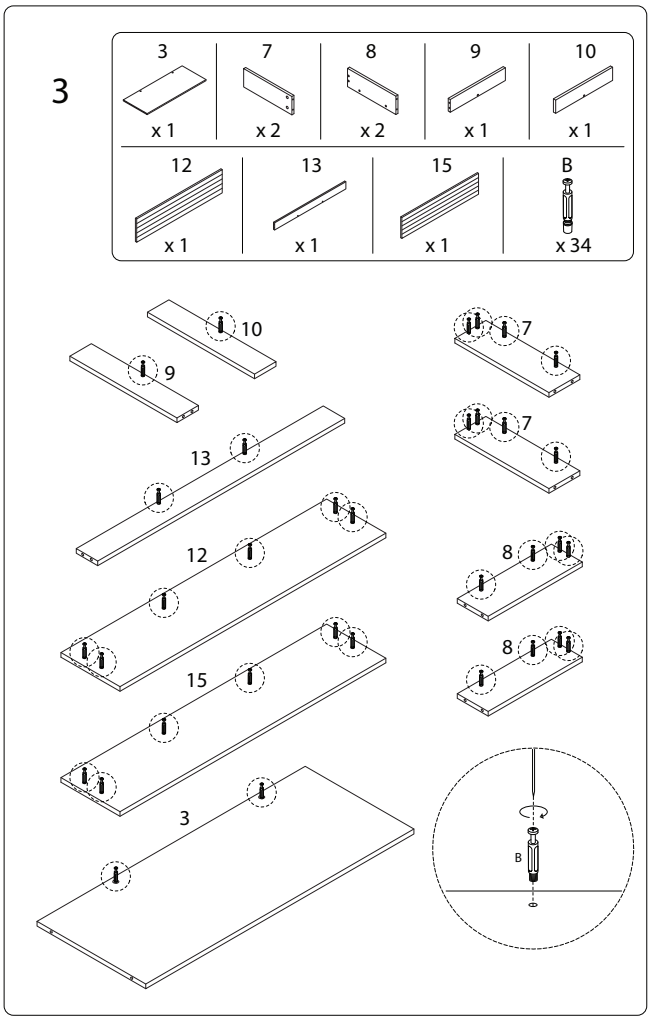
3
3
x 1
7
x 2
8
x 2
9
x 1
10
x 1
12
x 1
13
x 1
15
x 1
B
x 34
10
9
13
12
15
3
7
7
8
8
B

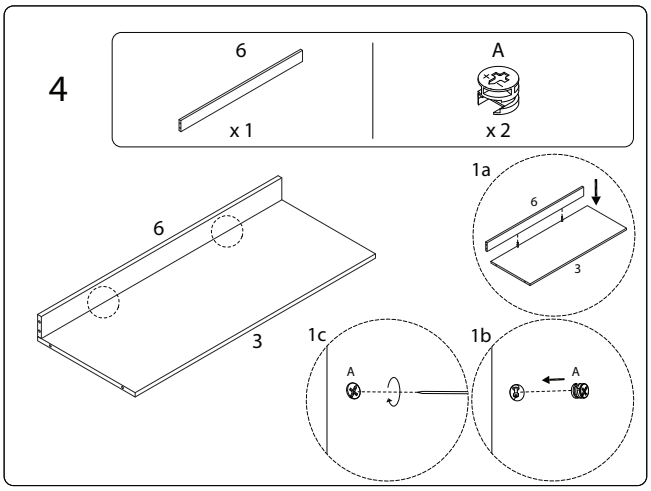
4
6
x 1
A
x 2
1a
6
3
1c
1b
A

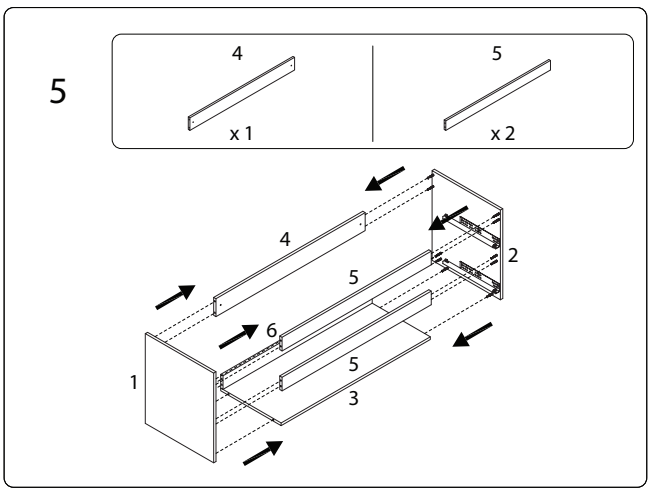
5
4
x 1
5
x 2
4
5
6
5
3
1
2

6

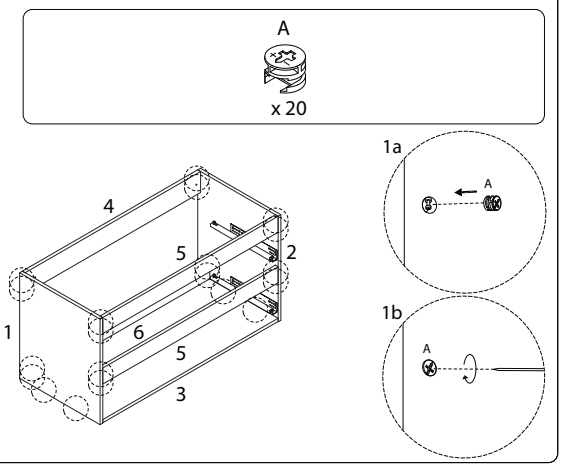

7

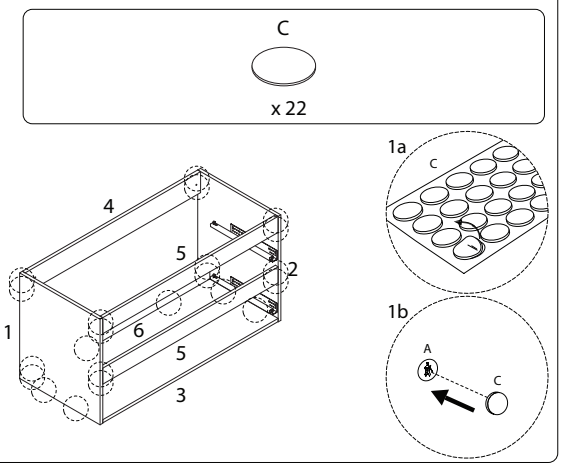

8

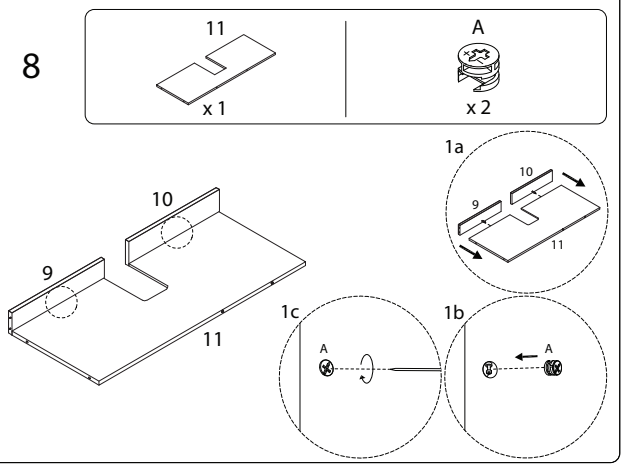

9

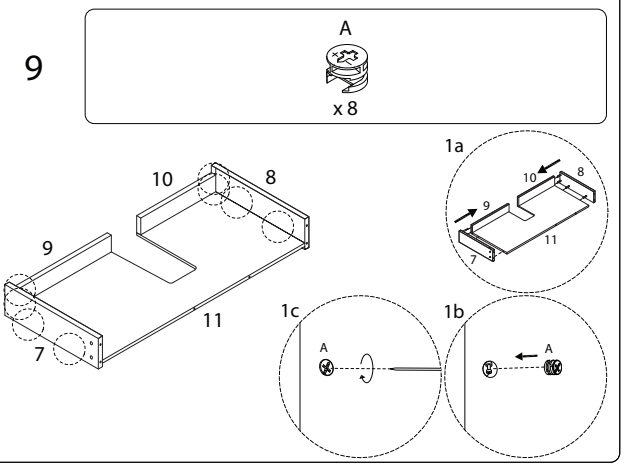

2354/URUCU-100/150925/

10

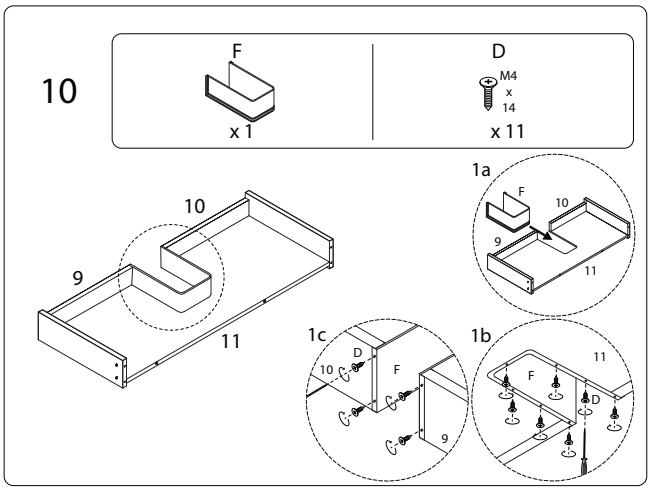

11

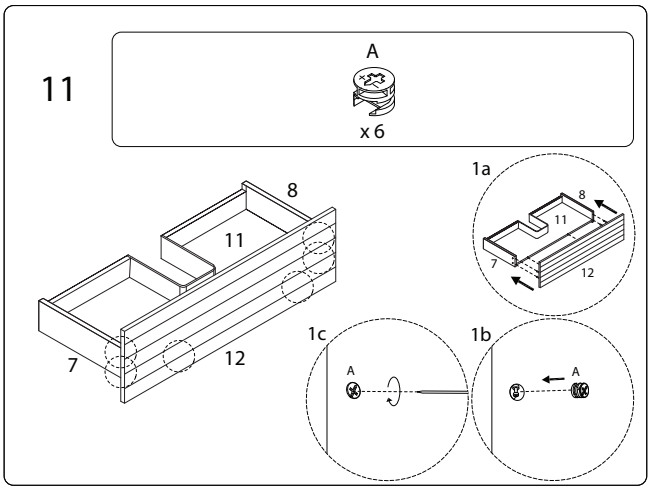

12

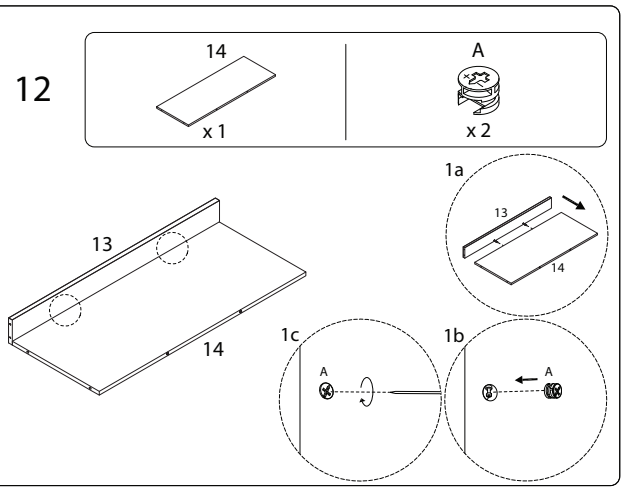

13

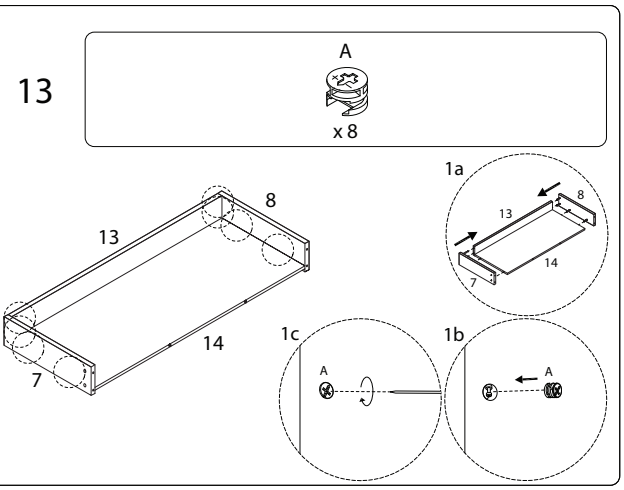

2354/URUCU-100/150925/

14

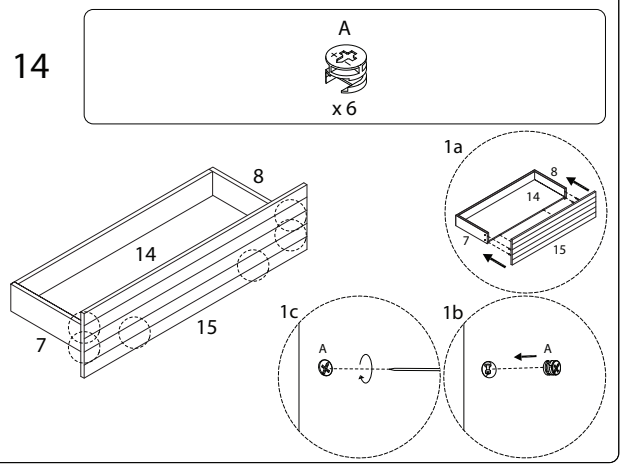

15

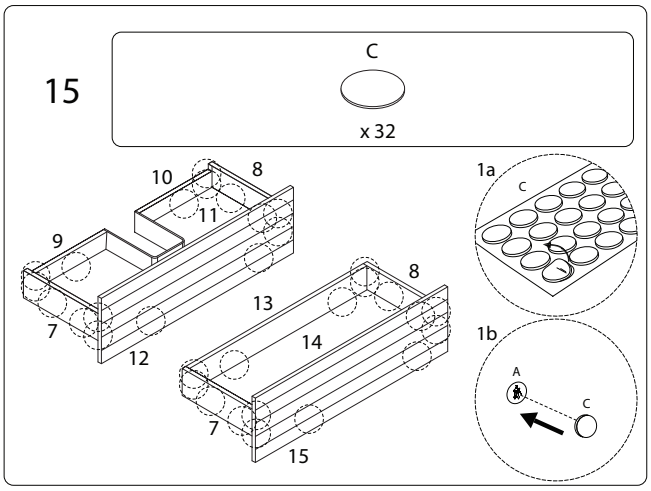

16

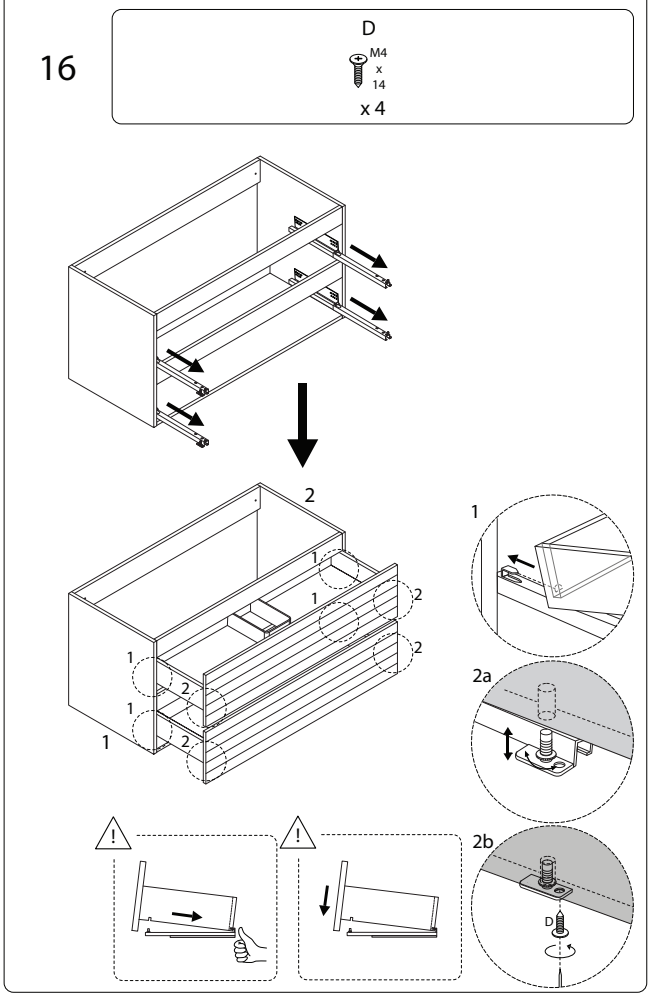

17

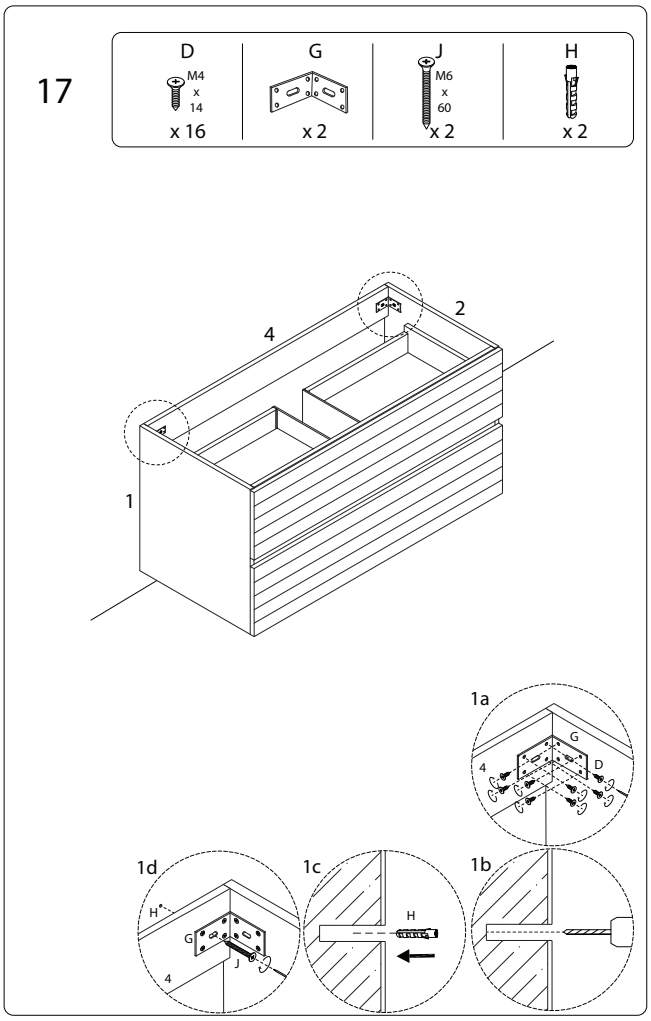

18

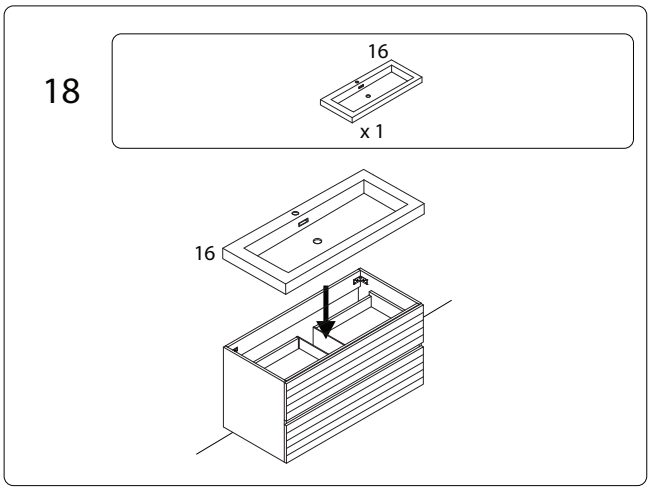
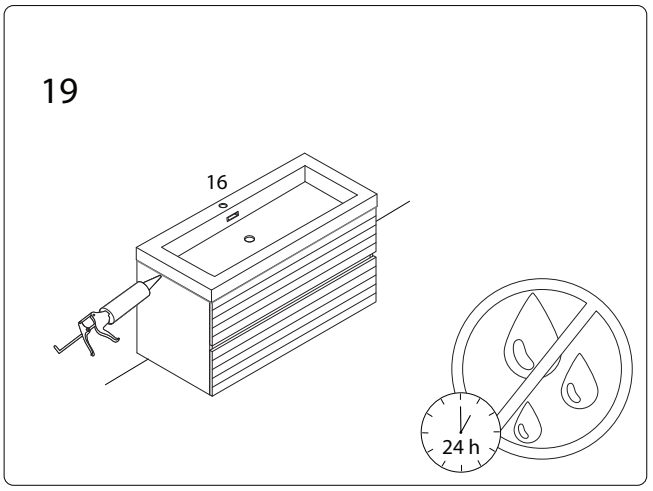
19