N625P352253

Product manual
Gebrauchsanweisung
Manuel du produit
Manual del producto
Manuale del prodotto

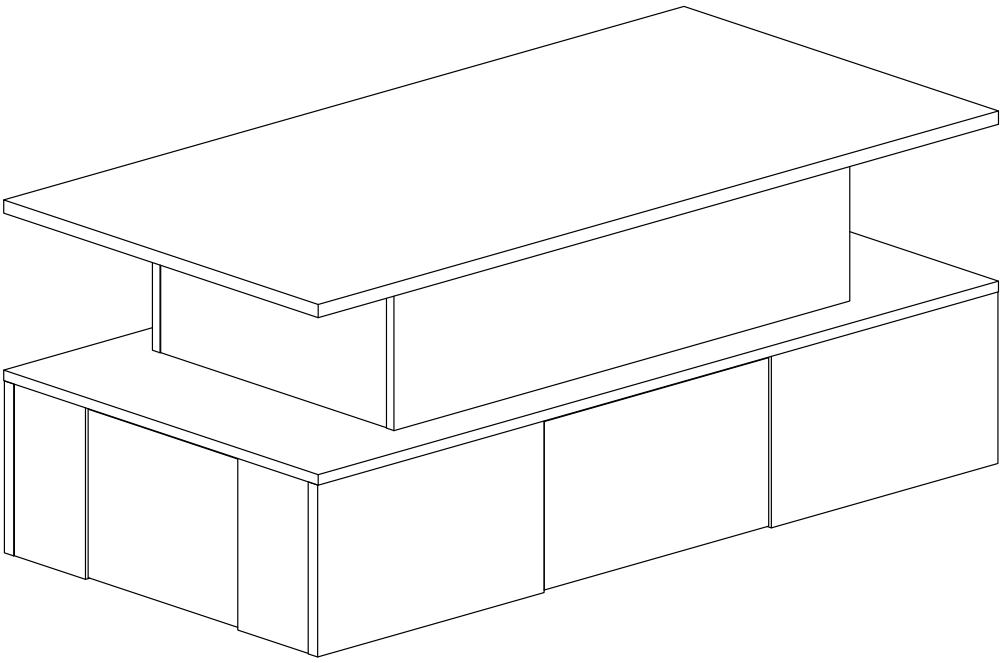



Points de collecte sur www.quefairedemesdechets.fr
Privilégiez la réparation ou le don de votre appareil !

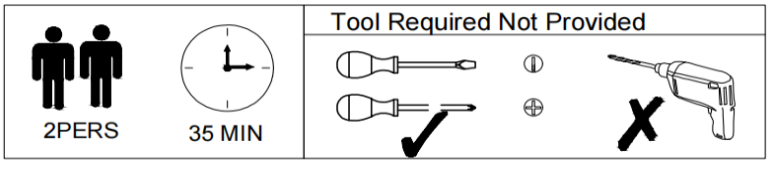



[DE]
Warnung: Lesen Sie die Anleitung vor dem Zusammenbau bitte vollständig durch. Überprüfen Sie, ob Sie alle auf den Seiten aufgeführten Komponenten und Werkzeuge haben.
Warnung: Legen Sie alle Teile auf eine ebene Fläche. Legen Sie eine weiche Decke oder Ähnliches darunter, um sie vor Kratzern oder Flecken zu schützen. Vermeiden Sie es, Komponenten über den Boden zu ziehen oder zu schieben.
Warnung: Überprüfen Sie regelmäßig alle Beschläge und Befestigungen, um sicherzustellen, dass sie sicher sind und um Unfälle zu vermeiden. Wenn Teile fehlen, kaputt, beschädigt oder abgenutzt sind, verwenden Sie das Produkt nicht weiter, bis es mit vom Hersteller autorisierten Teilen repariert wurde.
Warnung: Lassen Sie Kinder nicht auf die Möbel klettern, da dies zum Umkippen und zu schweren Verletzungen führen kann. Bauen Sie die Möbel außerhalb der Reichweite von Kindern zusammen.
Warnung: Stellen Sie die Möbel nicht in die Nähe von Feuerquellen oder heißen Gegenständen, um Brandgefahr zu vermeiden.
Warnung: Reinigen Sie die Möbel mit einem feuchten Tuch oder Alkohol. Verwenden Sie keine Reinigungsmittel mit ätzenden Chemikalien.

[EN]
Warning: Please read instructions fully before starting assembly. Check you have all the components and tools listed on pages.
Warning: Please place all parts on a flat surface. Place a soft blanket or similar underneath to protect against scratches or stains. Avoid dragging or sliding components across the floor.
Warning: Regularly check all fittings and fastenings to ensure they are secure and to prevent accidents. If any parts are missing, broken, damaged, or worn, discontinue use of the product until repairs have been made using factory authorized parts.
Warning: Do not allow children to climb on the furniture as this may result in tipping and serious personal injury. Assemble the furniture away from the reach of children.
Warning: Do not place furniture close to fire sources or high-temperature objects to avoid the risk of fire.
Warning: Clean furniture with a damp cloth or alcohol, avoid using cleaning agents containing corrosive chemicals.

[FR]
Avertissement : Veuillez lire entièrement les instructions avant de commencer l'assemblage. Vérifiez que vous disposez de tous les composants et outils répertoriés sur les pages.
Avertissement : Veuillez placer toutes les pièces sur une surface plane. Placez une couverture douce ou similaire en dessous pour les protéger des rayures ou des taches. Évitez de faire glisser les composants sur le sol.
Avertissement : Vérifiez régulièrement tous les raccords et fixations pour vous assurer qu'ils sont bien fixés et pour éviter les accidents. Si des pièces manquent, sont cassées, endommagées ou usées, cessez d'utiliser le produit jusqu'à ce que des réparations aient été effectuées à l'aide de pièces autorisées par l'usine.
Avertissement : Ne laissez pas les enfants grimper sur les meubles car cela pourrait entraîner un basculement et des blessures graves. Assemblez les meubles hors de portée des enfants.
Avertissement : Ne placez pas les meubles à proximité de sources de feu ou d'objets à haute température pour éviter tout risque d'incendie.
Avertissement : Nettoyez les meubles avec un chiffon humide ou de l'alcool, évitez d'utiliser des produits de nettoyage contenant des produits chimiques corrosifs.



[IT]
Attenzione: leggere attentamente le istruzioni prima di iniziare il montaggio. Verificare di avere tutti i componenti e gli strumenti elencati nelle pagine.
Attenzione: posizionare tutte le parti su una superficie piana. Posizionare una coperta morbida o simile sotto per proteggere da graffi o macchie. Evitare di trascinare o far scivolare i componenti sul pavimento.
Attenzione: controllare regolarmente tutti i raccordi e i dispositivi di fissaggio per assicurarsi che siano sicuri e per prevenire incidenti. Se alcune parti sono mancanti, rotte, danneggiate o usurate, interrompere l'uso del prodotto fino a quando non siano state eseguite le riparazioni utilizzando parti autorizzate dalla fabbrica.
Attenzione: non consentire ai bambini di arrampicarsi sui mobili poiché ciò potrebbe causare ribaltamenti e gravi lesioni personali. Montare i mobili lontano dalla portata dei bambini.
Attenzione: non posizionare i mobili vicino a fonti di fuoco o oggetti ad alta temperatura per evitare il rischio di incendio.
Attenzione: pulire i mobili con un panno umido o alcol, evitare di utilizzare detergenti contenenti sostanze chimiche corrosive.

[ES]
Advertencia: Lea las instrucciones completamente antes de comenzar el montaje. Compruebe que tiene todos los componentes y herramientas que se enumeran en las páginas.
Advertencia: Coloque todas las piezas sobre una superficie plana. Coloque una manta suave o algo similar debajo para protegerlas de rayones o manchas. Evite arrastrar o deslizar los componentes por el piso.
Advertencia: Verifique regularmente todos los accesorios y fijaciones para asegurarse de que estén seguros y evitar accidentes. Si falta alguna pieza, está rota, dañada o desgastada, deje de usar el producto hasta que se hayan realizado las reparaciones con piezas autorizadas de fábrica.
Advertencia: No permita que los niños se suban a los muebles, ya que esto puede provocar que se vuelquen y lesiones personales graves. Monte los muebles fuera del alcance de los niños.
Advertencia: No coloque los muebles cerca de fuentes de fuego u objetos de alta temperatura para evitar el riesgo de incendio.
Advertencia: Limpie los muebles con un paño húmedo o alcohol, evite usar agentes de limpieza que contengan químicos corrosivos.

Importeur Importateur	Decobus Handel GmbH
Adresse	Innungsstraße 9,21244 Buchholz,Deutschland
Email/URL Courriel/URL	https://www.decobusgroup.de
Hersteller Fabricant	SHAN DONG YIJUMUZHAI SMART HOME CO.,LTD
Adresse	100 METERS NORTH OF INTERSECTION OF WEIGAO ROAD AND YANGTIAN ROAD,LUOCHENG STREET,SHOUGUANG CITY ,WEIFANG CITY ,SHANDONG PROVINCE ,CHINA
Email/URL Courriel/URL	http://www.yinjumuzhai.com
EC REP	Decobus Handel GmbH Innungsstraße 9,21244 Buchholz,Deutschland https://www.decobusgroup.de

Parts List

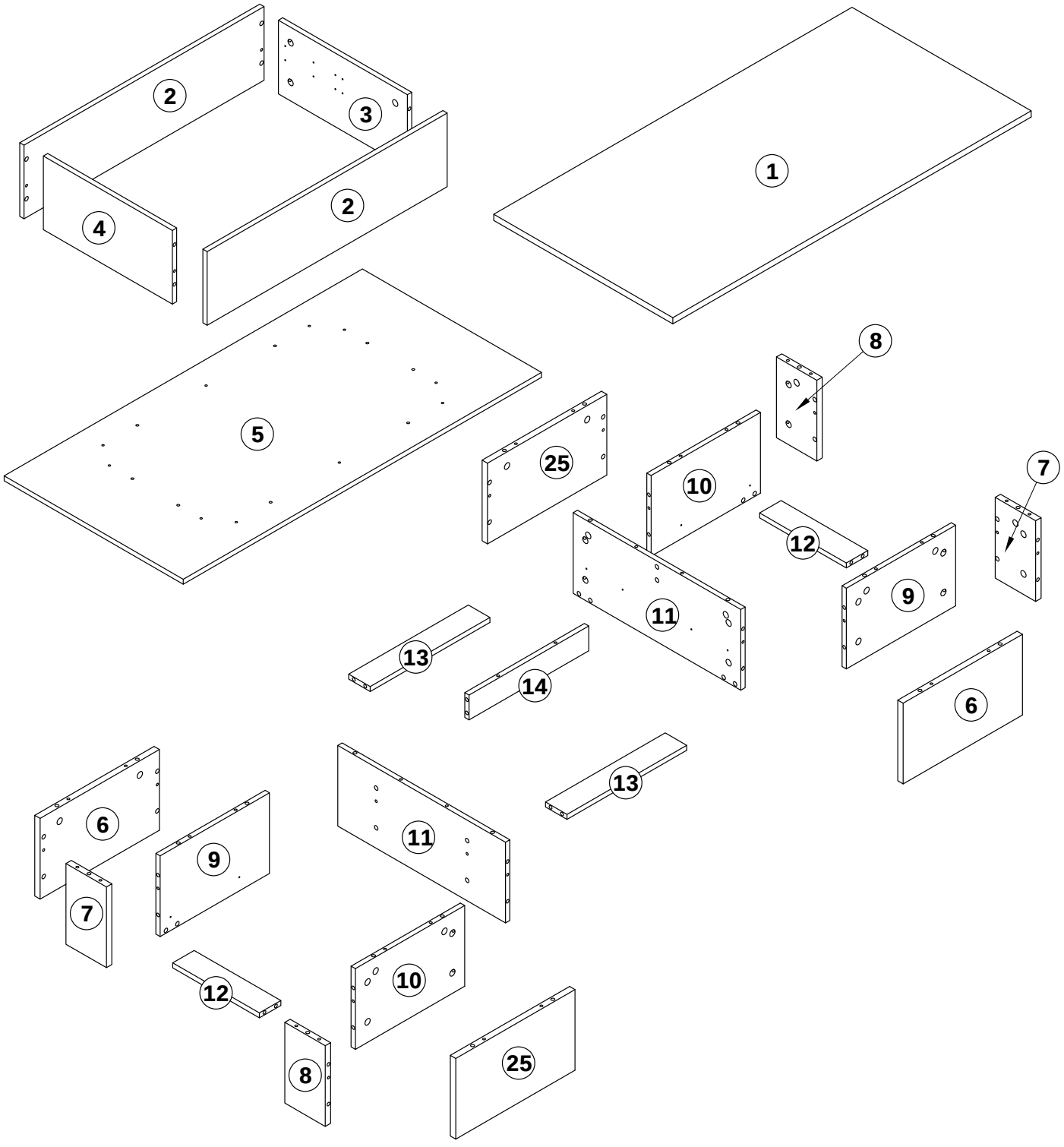

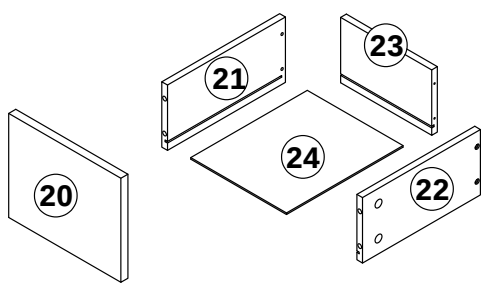

x 2

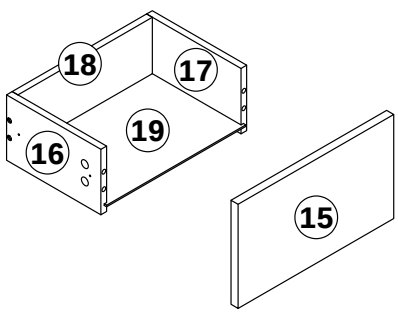

x 2

N625P352253

1 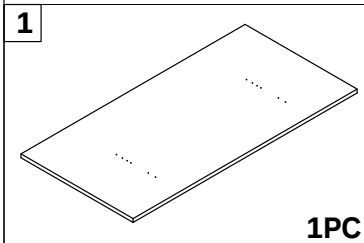 1PC	2 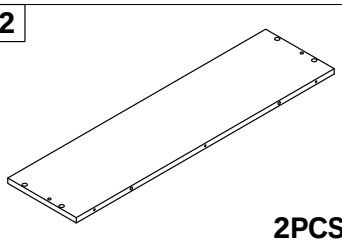 2PCS	3 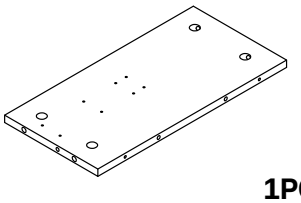 1PC	4 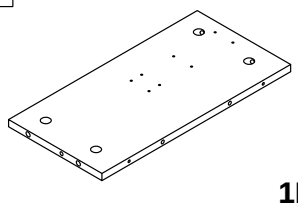 1PC
5 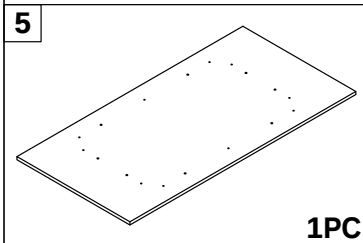 1PC	6 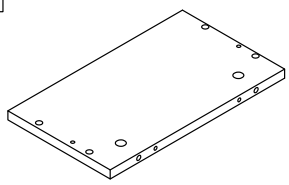 2PCS	7 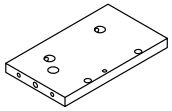 2PCS	8 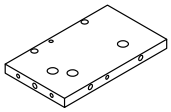 2PCS
9 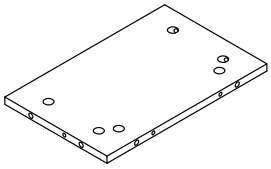 2PCS	10 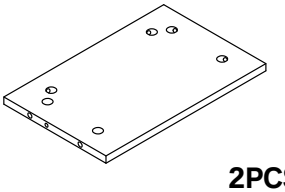 2PCS	11 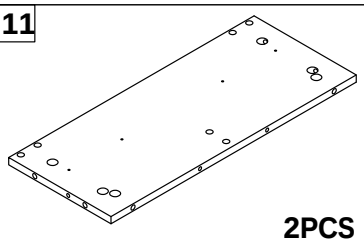 2PCS	12 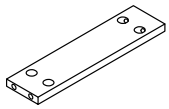 2PCS
13 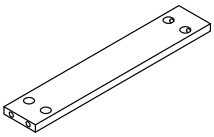 2PCS	14 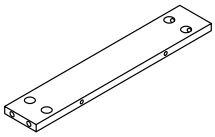 1PC	15 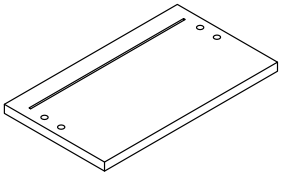 2PCS	16 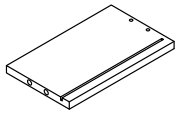 2PCS
17 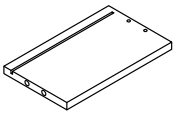 2PCS	18 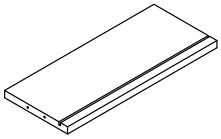 2PCS	19 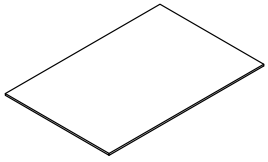 2PCS	20 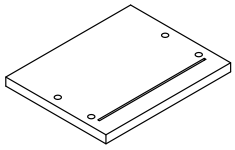 2PCS
21 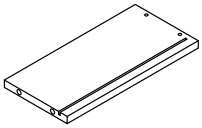 2PCS	22 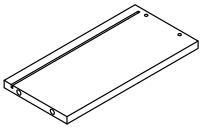 2PCS	23 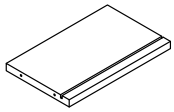 2PCS	24 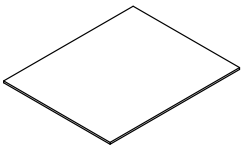 2PCS
25 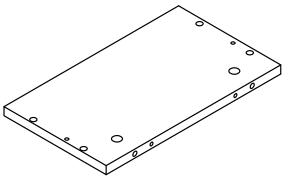 2PCS			

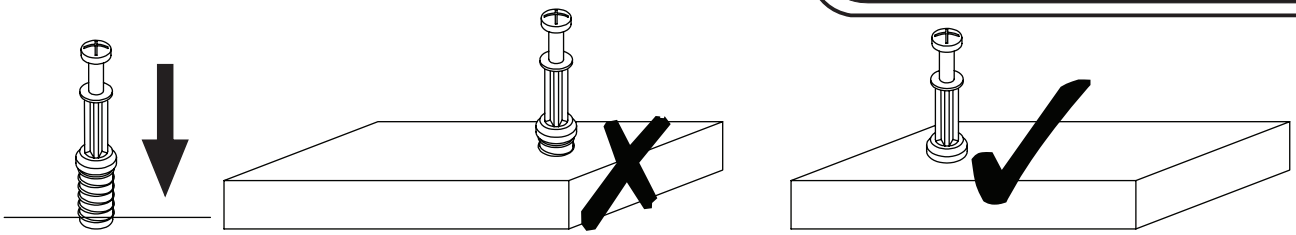

EN_QUICKFIT: Tighten quickfit until shoulder is flush with panel.Do not overtighten or undertighten.
FR_RACCORD RAPIDE:Faites serrer le raccord rapide jusqu'à ce que l'épaulement soit parfaitement encastré dans le panneau. Il ne faut ni trop serrer ni insuffisamment serrer.
ES_QUICKFIT:Apriete quickfit hasta que el hombre se descargue con el panel. NO lo sobreapriete ni lo apriete poco.
DE_QUICKFIT:Ziehen Sie den Quickfit fest, bis die Schulter mit der Platte bündig ist. Bitte nicht zu fest oder zu schwach anziehen.
IT_MONTAGGIO RAPIDO:Stringere il montaggio rapido fino a quando la spalla è a filo con il pannello, non stringere troppo o troppo poco.

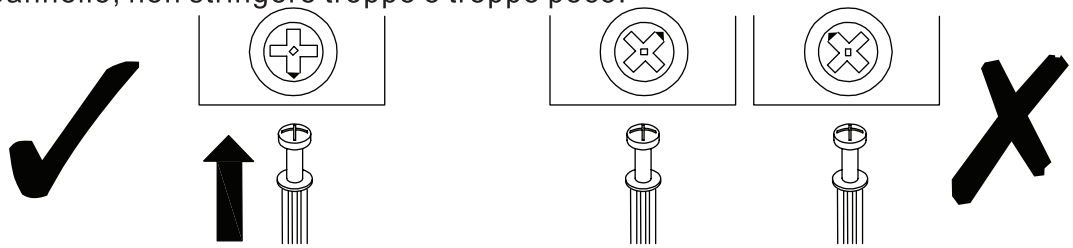

EN_CAM LOCK: When fitting cam lock, ensure starting position is correct before you insert connecting quickfit.
FR_SERRURE BATTEUSE:Avant d'insérer la serrure batteuse, veillez à la bonne orientation avant d'insérer le raccord rapide.
ES_CIERRE DE LA CÁMARA:Cuando instale el cierre de la cámara, asegúrese de que la posición de inicio es correcta antes de que inserte el quickfit conector.
DE_CAM-LOCK:Achten Sie bei der Montage des Cam-Locks auf die richtige Ausgangsposition, bevor Sie den Quickfit einsetzen.
IT_BLOCCAGGIO A CAMMA:Quando si monta il bloccaggio a camma, assicurarsi che la posizione iniziale sia corretta prima di inserire il montaggio rapido di collegamento.

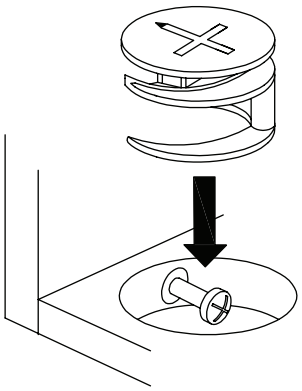

EN_ Quickfit head should be in the centre of the cam lock when the two panels are joined.
Cam lock should be inserted before quickfit.
FR_ Lorsque les deux panneaux sont assemblés, la tête du raccord rapide doit reposer au centre de la serrure batteuse.
Il faut insérer la serrure batteuse avant le raccord rapide.
ES_ El cabezal del quickfit debe estar en el centro del cierre de la cámara cuando se unan los dos paneles.
Se debe insertar el cierre de la cámara antes que el quickfit.
DE_ Der Quickfit-Kopf sollte sich in der Mitte des Cam-Locks befinden, wenn die beiden Platten zusammengefügt sind.
Der Cam-Lock sollte vor dem Quickfit eingesetzt werden.
IT_ La testa del montaggio rapido deve trovarsi al centro del bloccaggio a camma quando i due pannelli sono uniti.
Il Bloccaggio a Camma deve essere inserito prima del montaggio rapido.

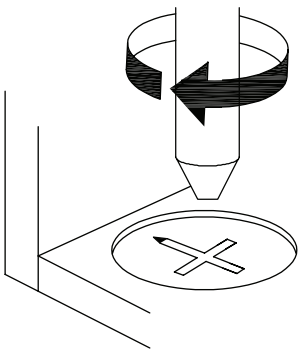

EN_ Turn cam lock clockwise to tighten.
FR_ Faites tourner la serrure batteuse dans le sens des aiguilles d'une montre pour la resserrer.
ES_ Gire el cierre de la cámara en sentido horario para apretarlo.
DE_ Drehen Sie den Cam-Lock im Uhrzeigersinn, um ihn festzuziehen.
IT_ Ruotare il bloccaggio a camma in senso orario per stringere.

Hardware N625P352253

A

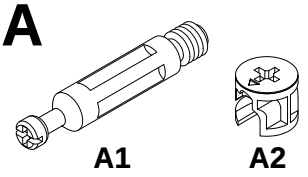

A1 A2

100SETS

B

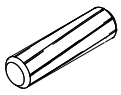

6 x 30MM 58PCS

C

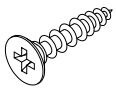

3.5 x 12MM 68PCS

D

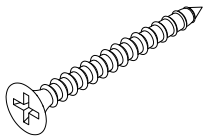

3.5 x 35MM 16PCS

E

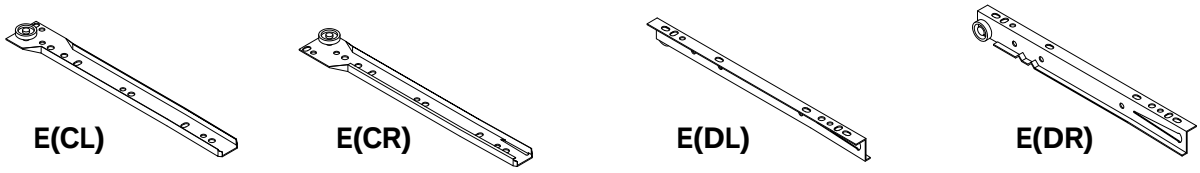

E(CL) E(CR) E(DL) E(DR)

2STES

F



F1 F2

2SETS

G

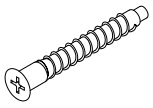

5 x 40MM 10PCS

H

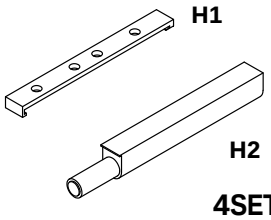

4SETS

J

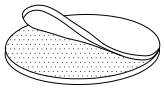

40PCS

K

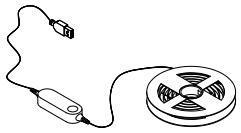

1SET

L

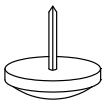

8PCS

M

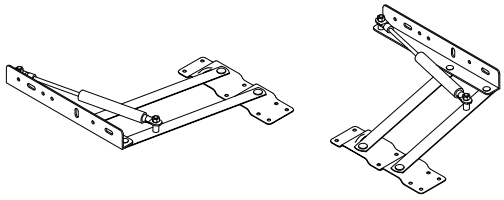

1SET

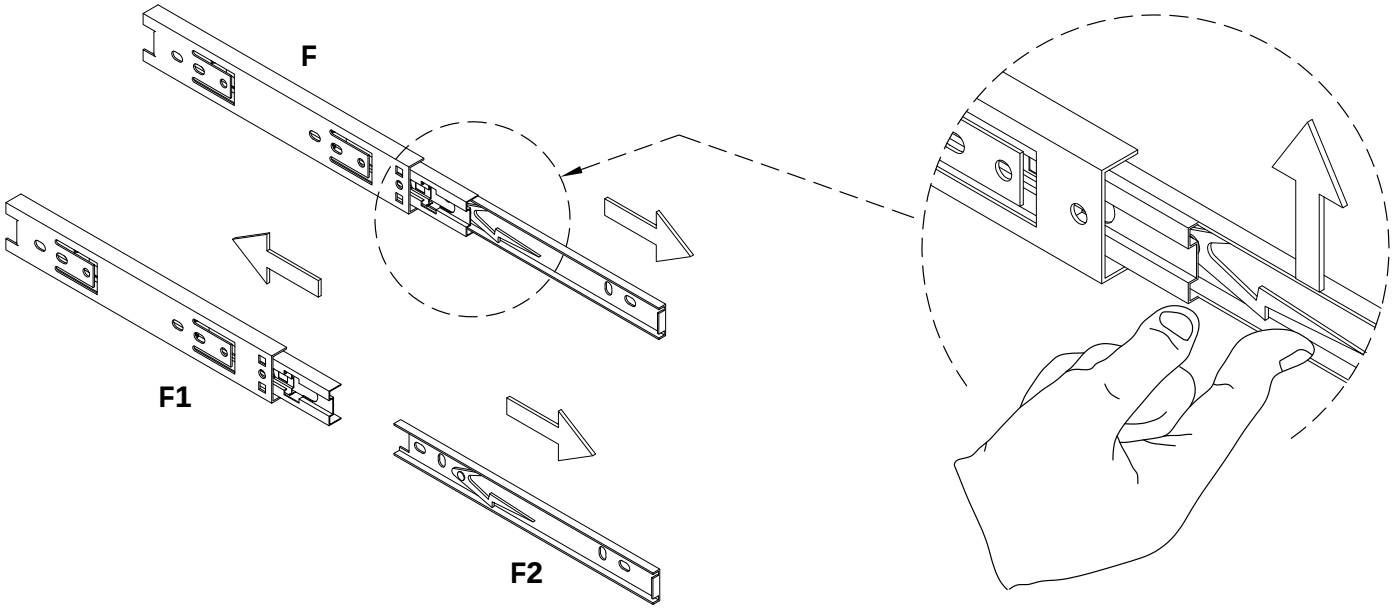

1	A1	B	C	E(CL)	E(CR)
	24PCS	6 x 30MM 36PCS	3.5 x 12MM 8PCS	2PCS	2PCS

x 2

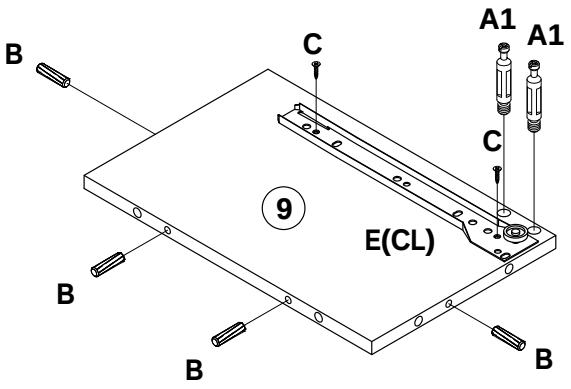

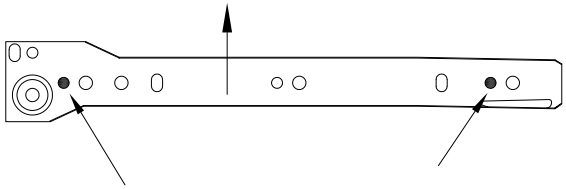

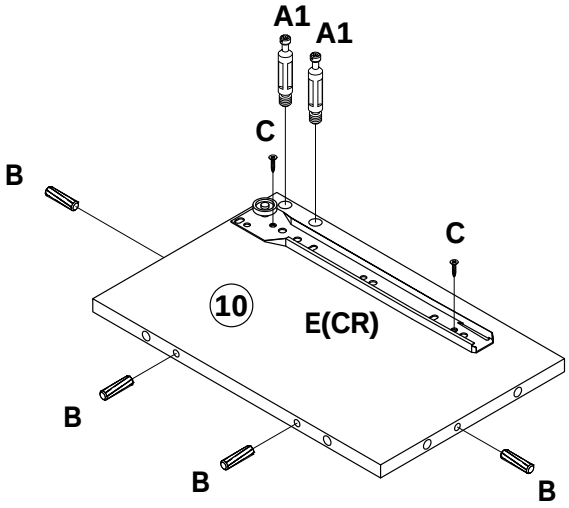

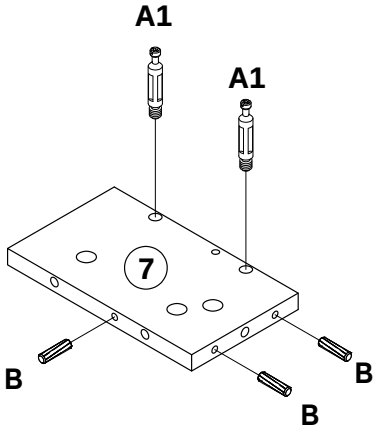

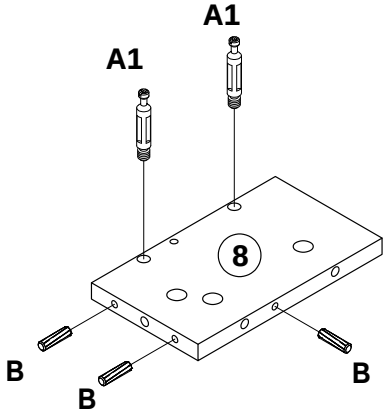

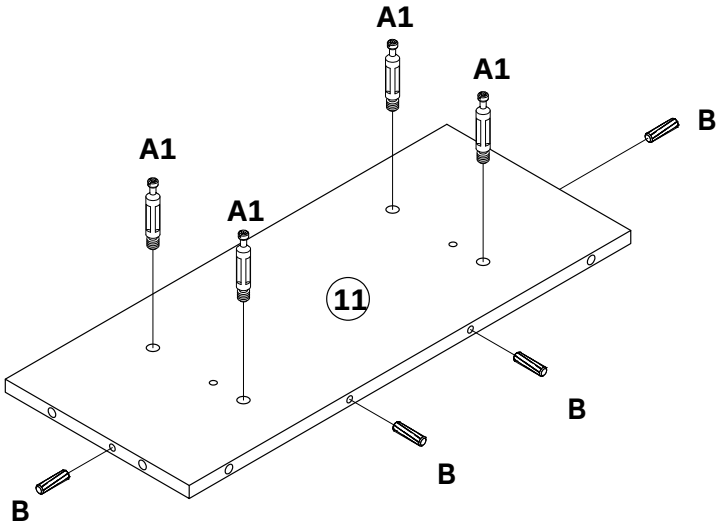

2

A1 — 16PCS

B — 6 x 30MM — 10PCS

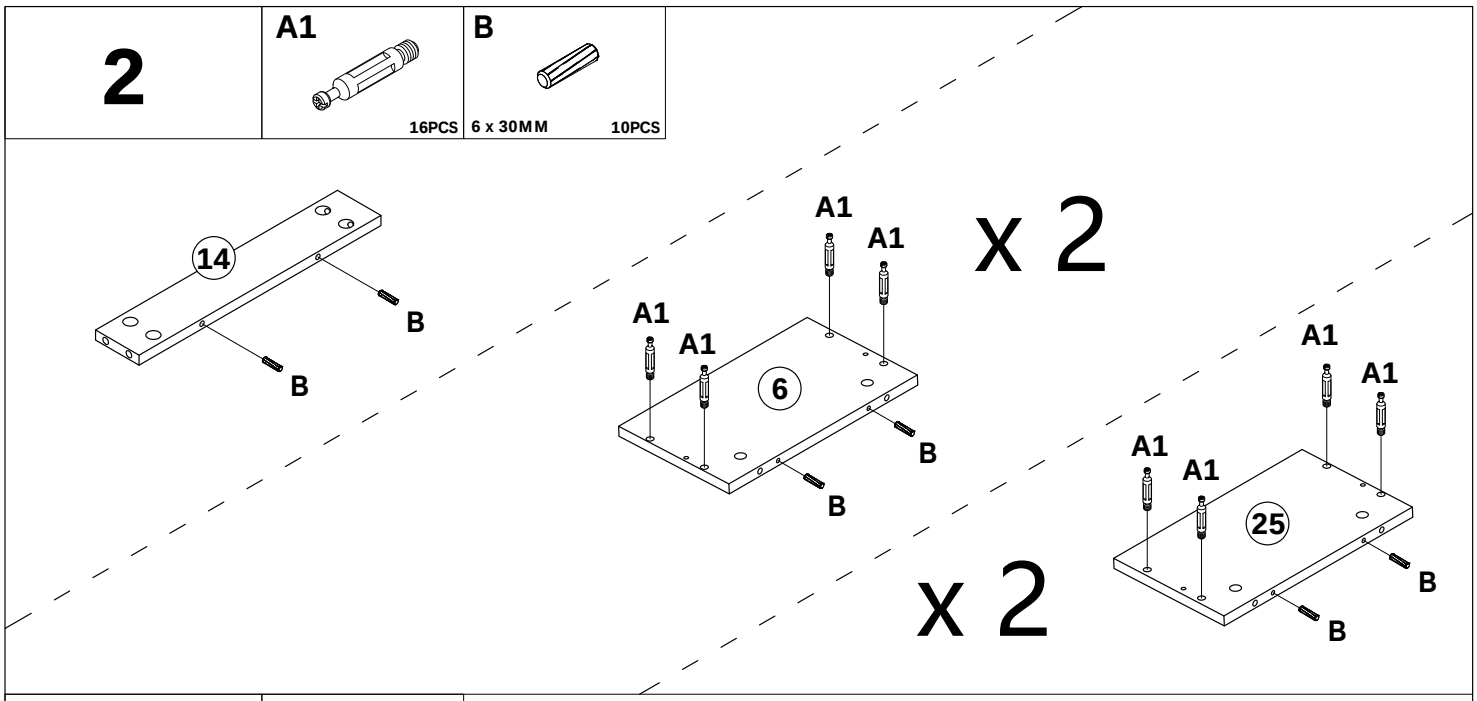

3

A2 — 16PCS

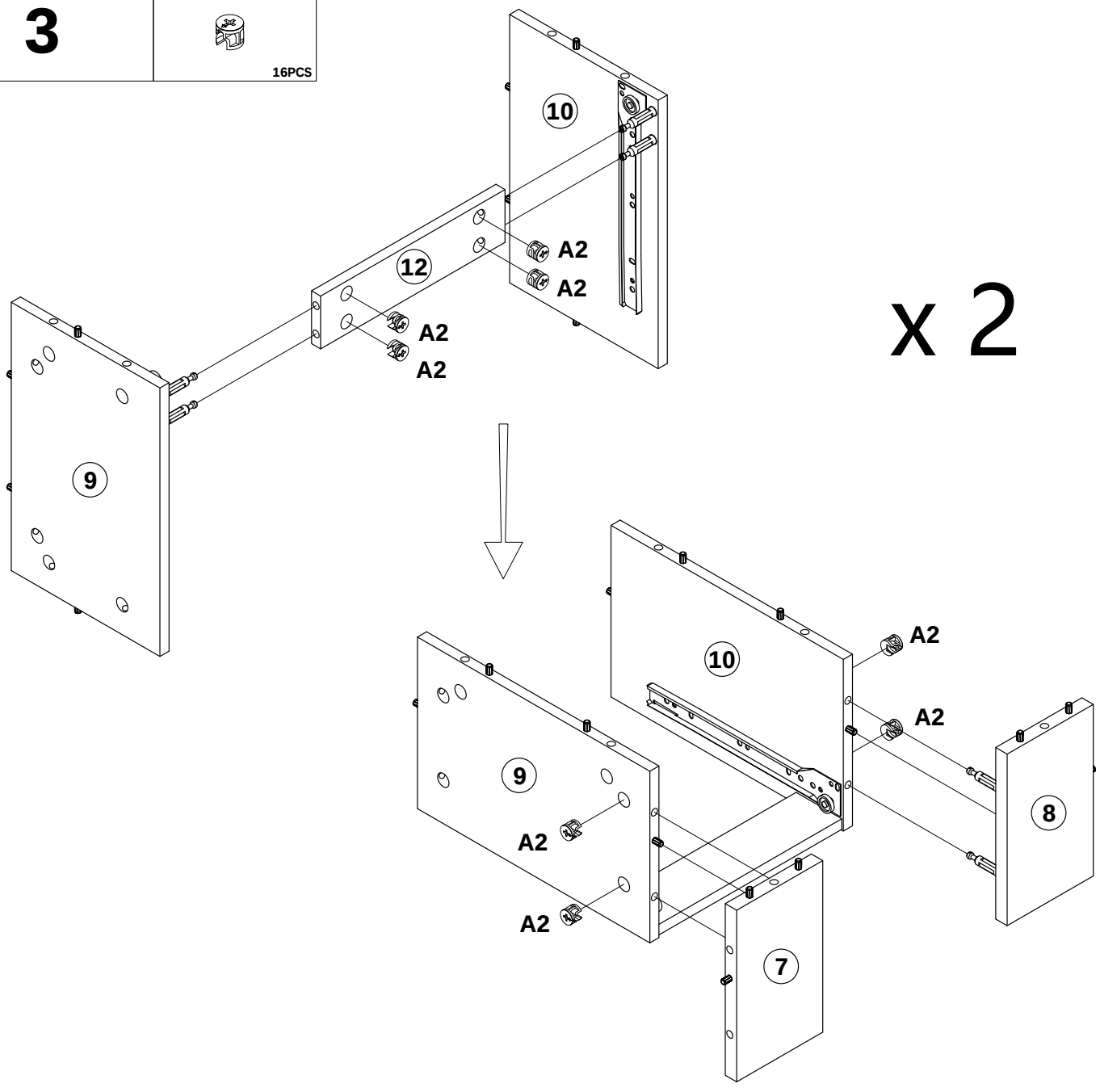

4	A2  24PCS

x 2

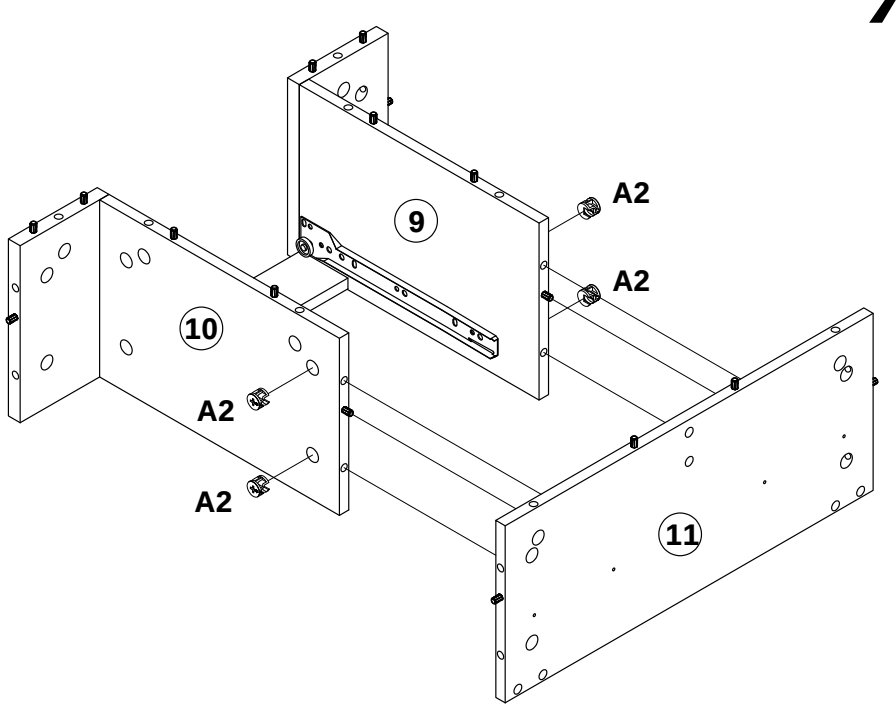

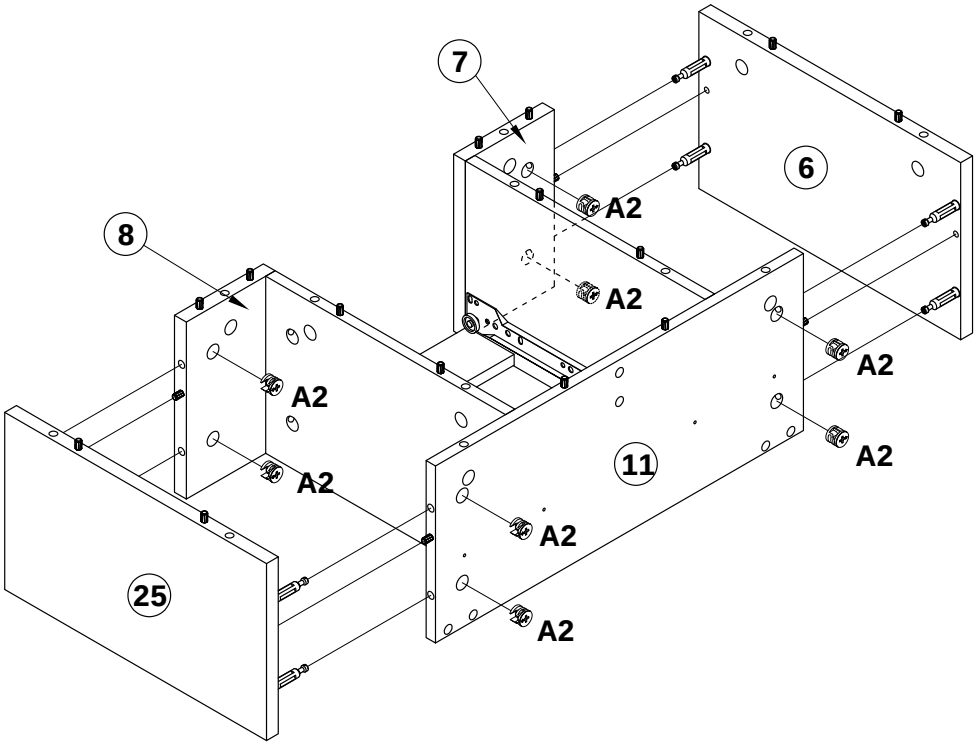

5	A1	C	F1
	12PCS	3.5 x 12MM 8PCS	4PCS

x 2

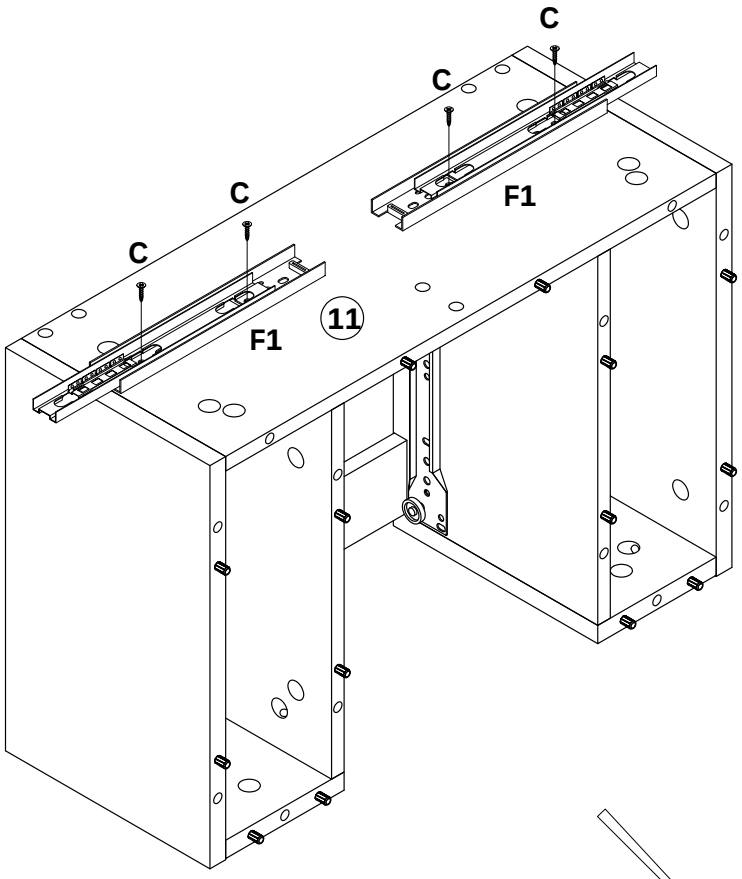

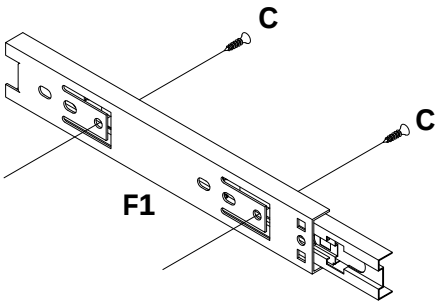

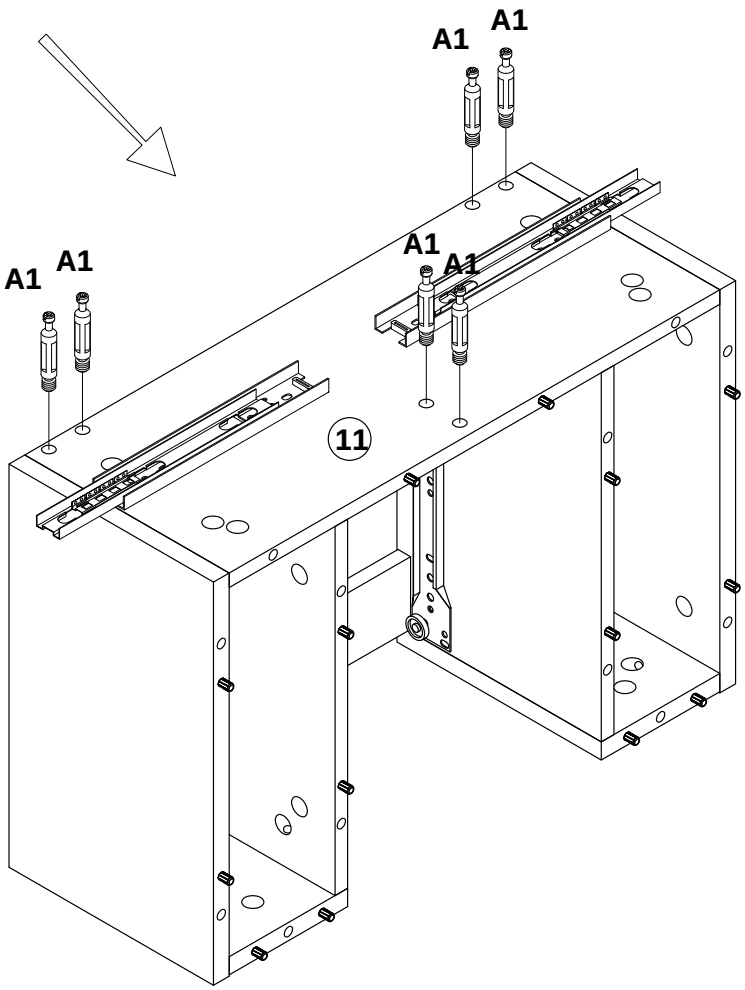

6

A2	L
12PCS	8PCS

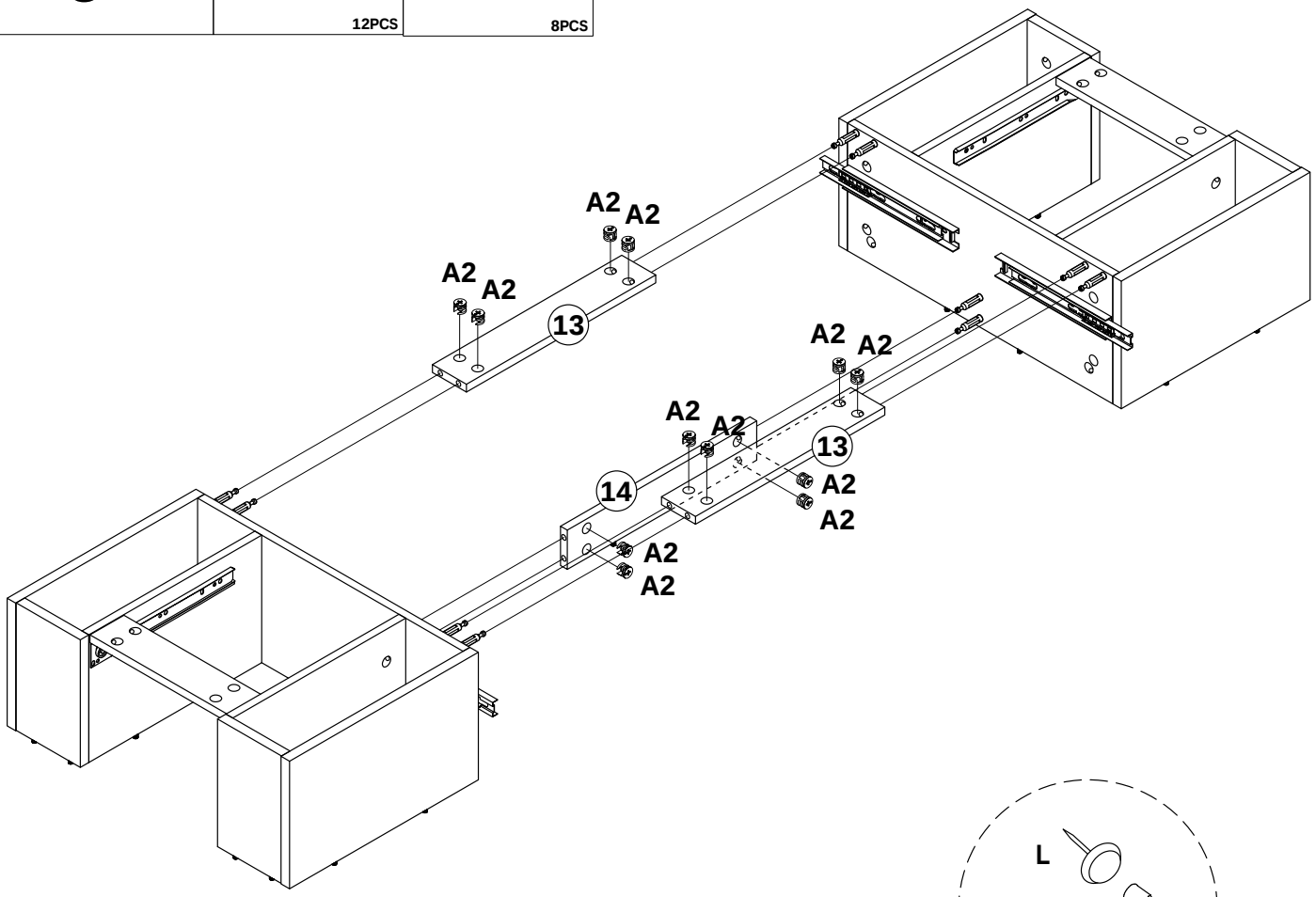

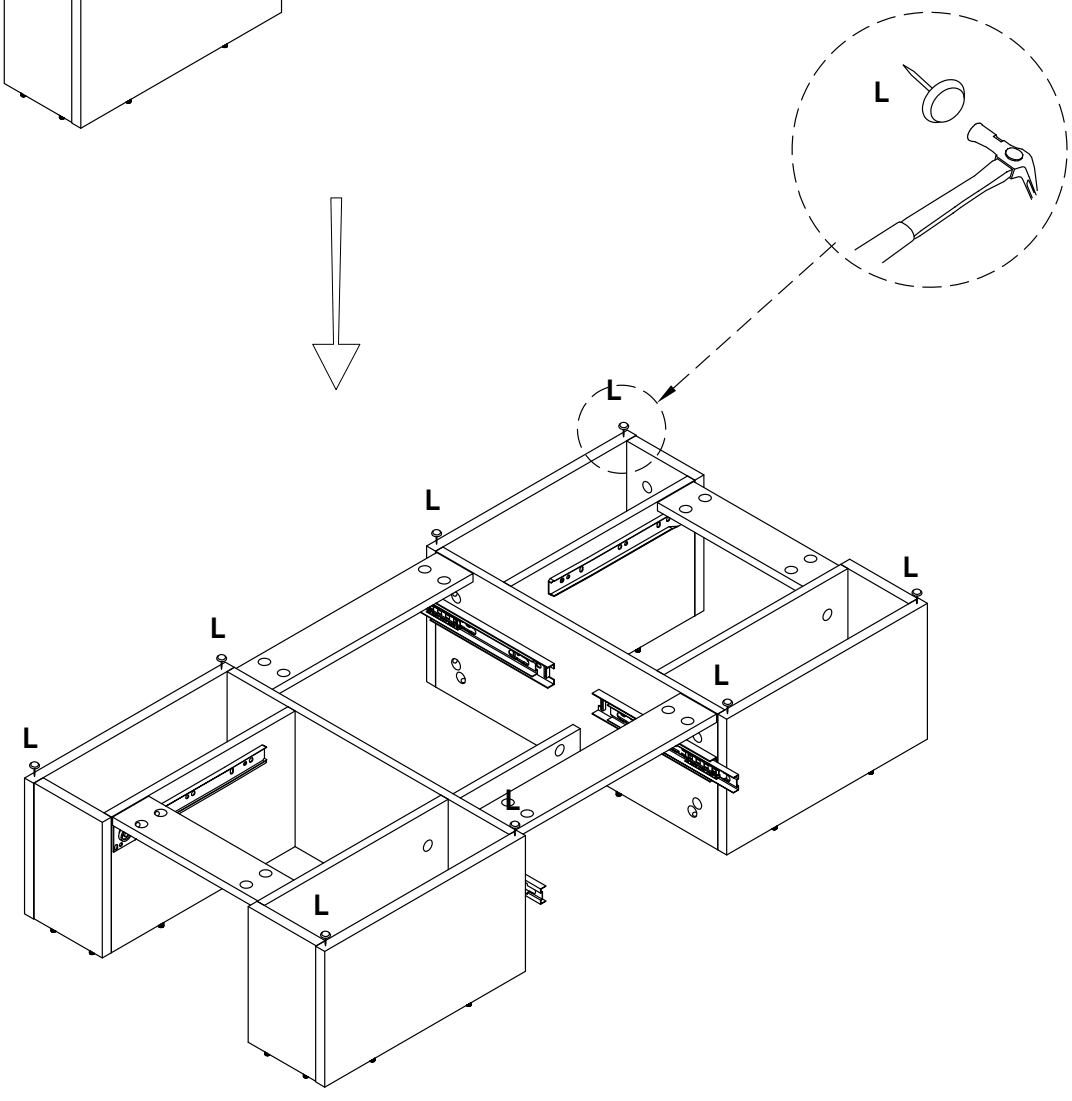

7

A1 — 8PCS

B — 6 x 30MM — 12PCS

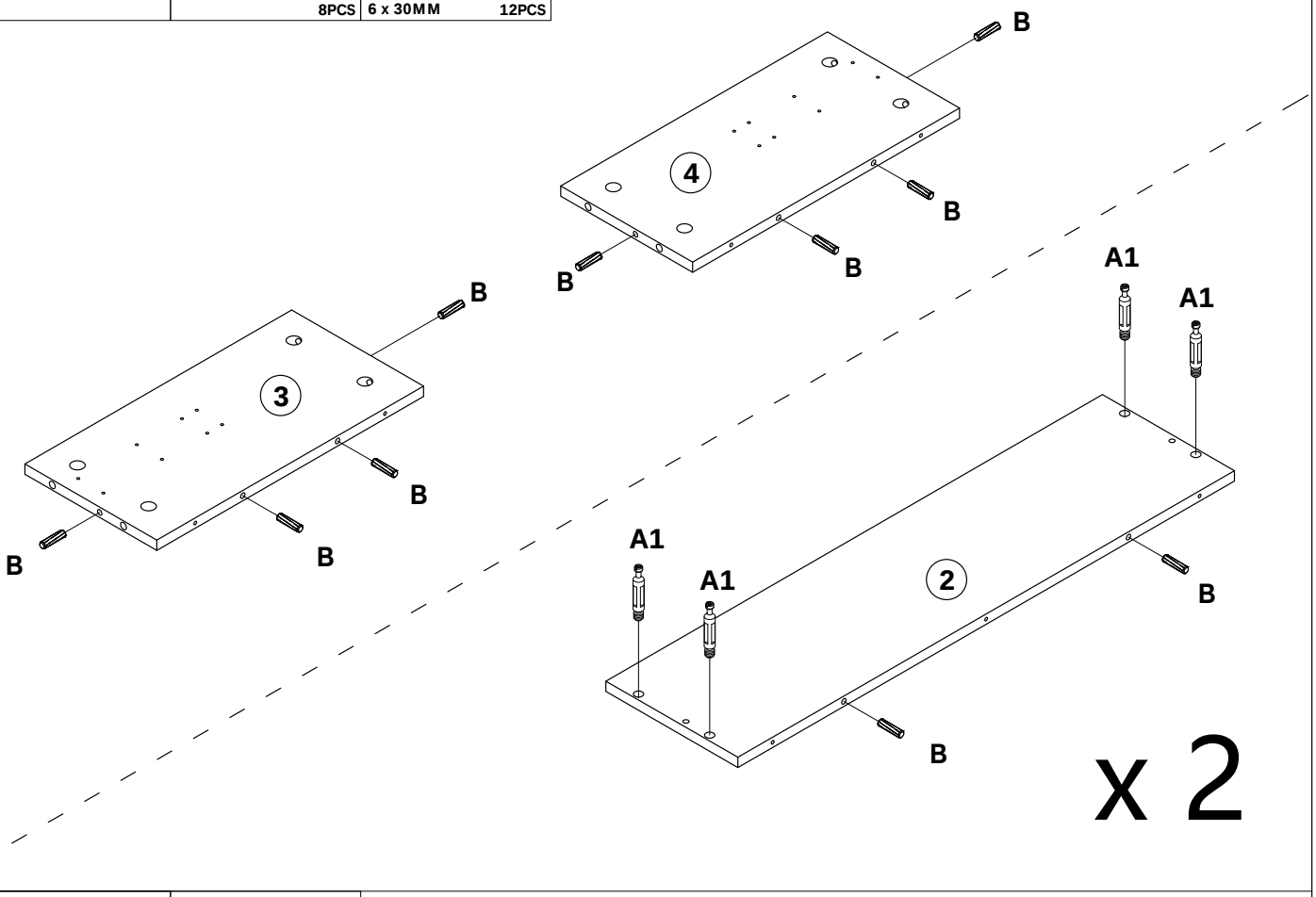

8

A2 — 8PCS

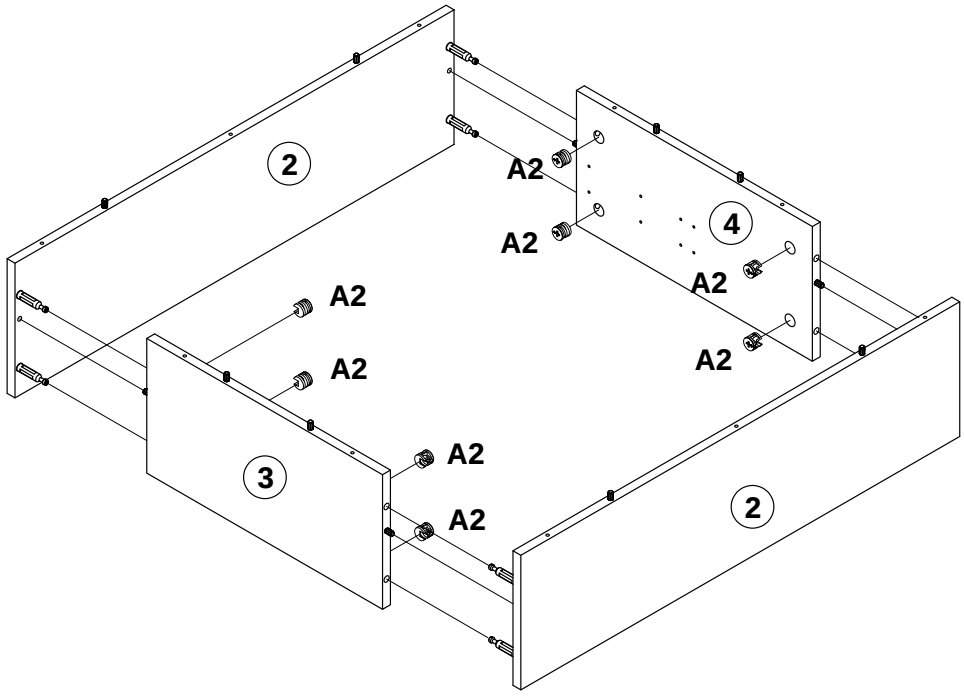

9

A1	G	C	H
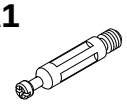 24PCS	 5 x 40MM 10PCS	 3.5 x 12MM 8PCS	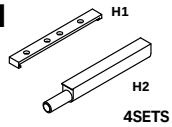 4SETS

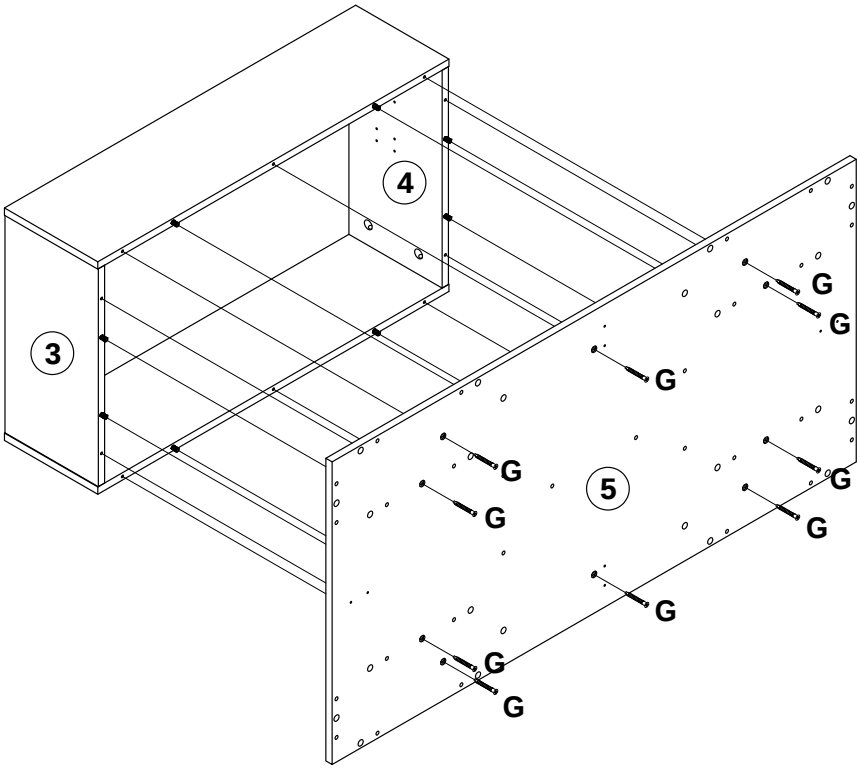

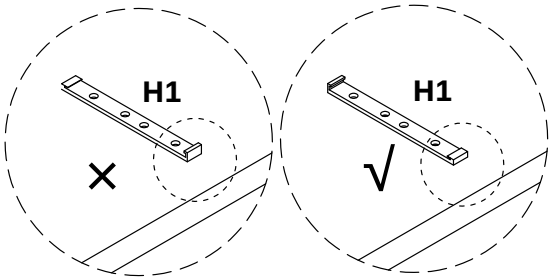

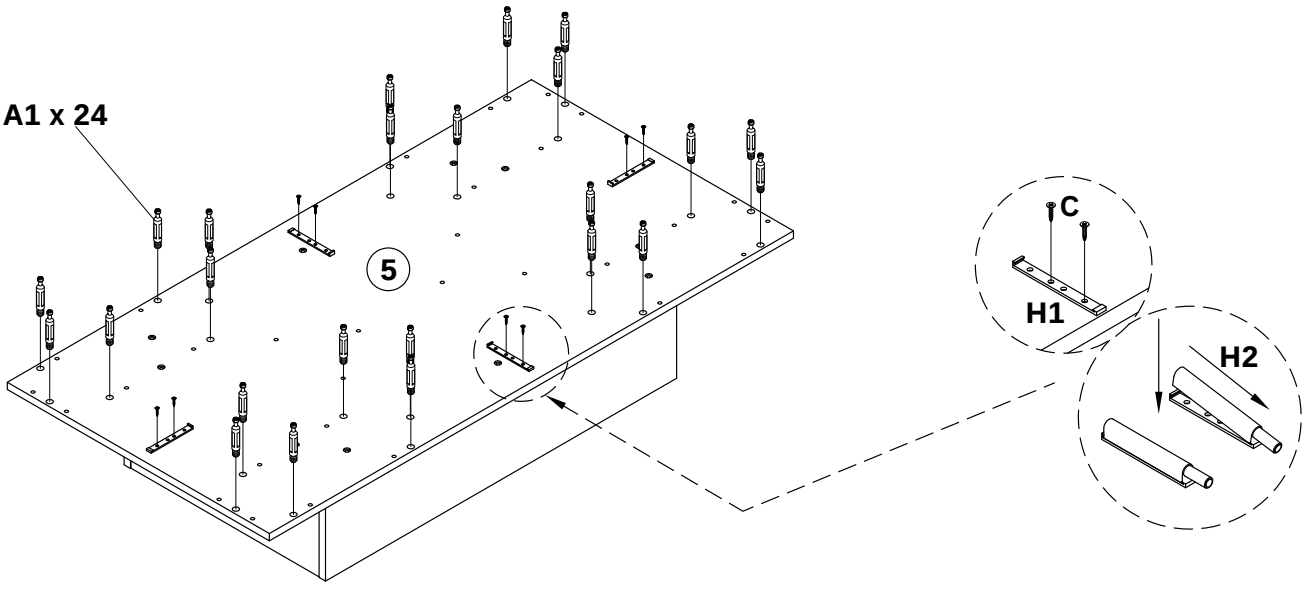

10

A2



24PCS

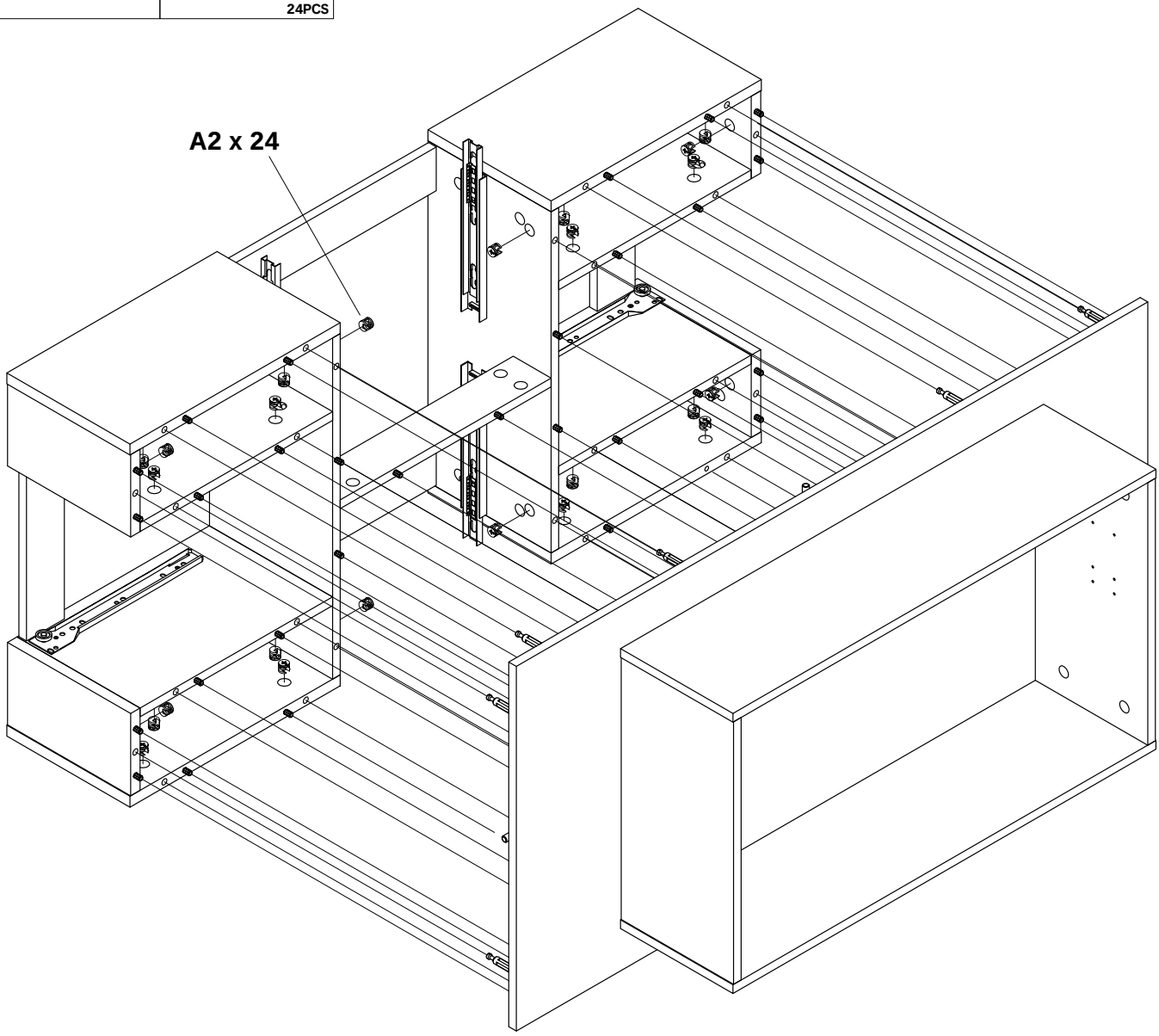

11

D



3.5 x 35MM 8PCS

x 2

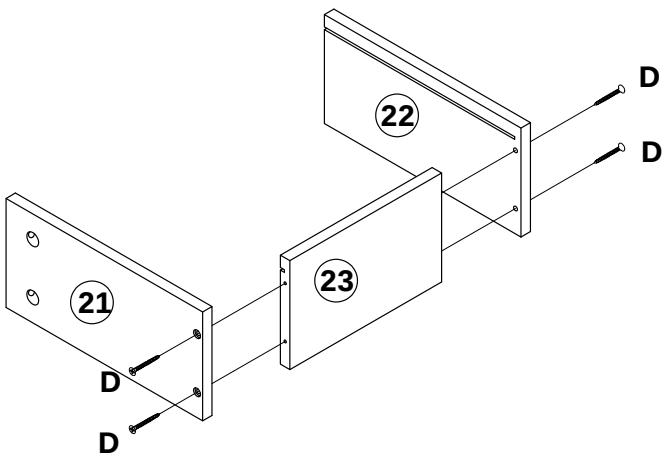

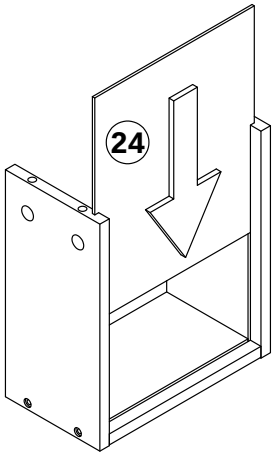

12

A1 — 8PCS

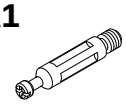

A2 — 8PCS



x 2

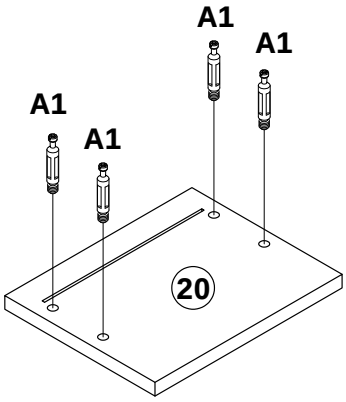

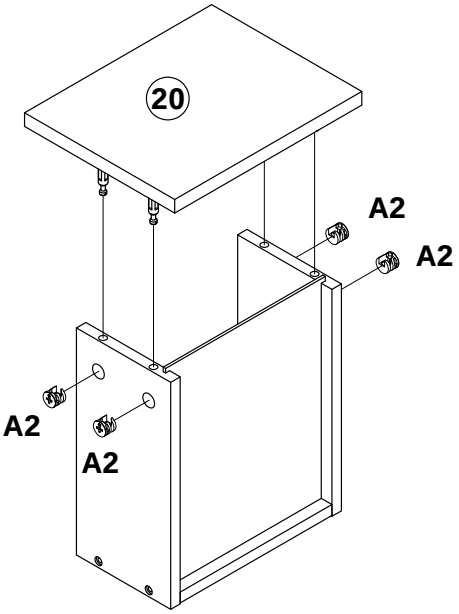

13

C — 3.5 x 12MM — 8PCS



E(DL) — 2PCS

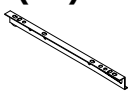

E(DR) — 2PCS

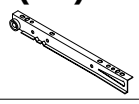

x 2

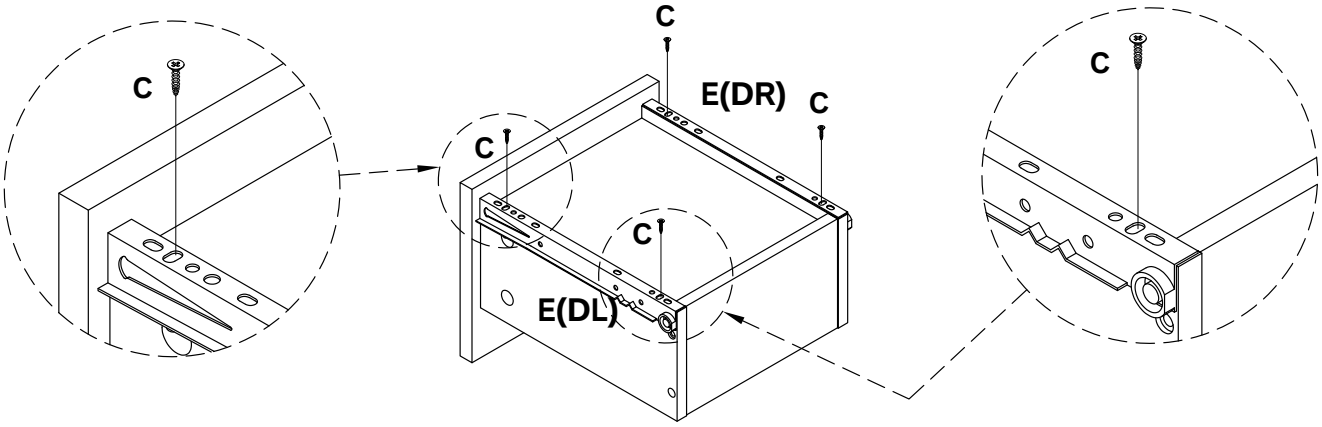

14

D — 3.5 x 35MM — 8PCS



x 2

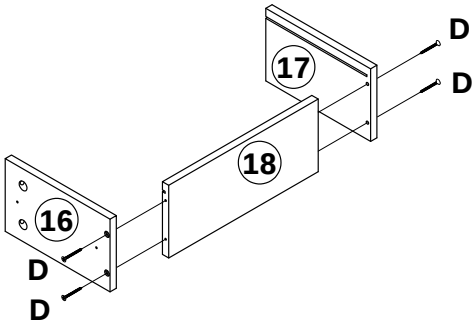

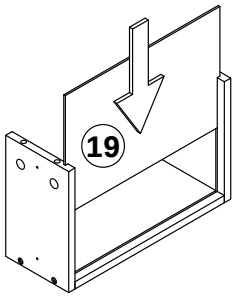

15

A1	A2	C	F2
8PCS	8PCS	3.5 x 12MM 8PCS	4PCS

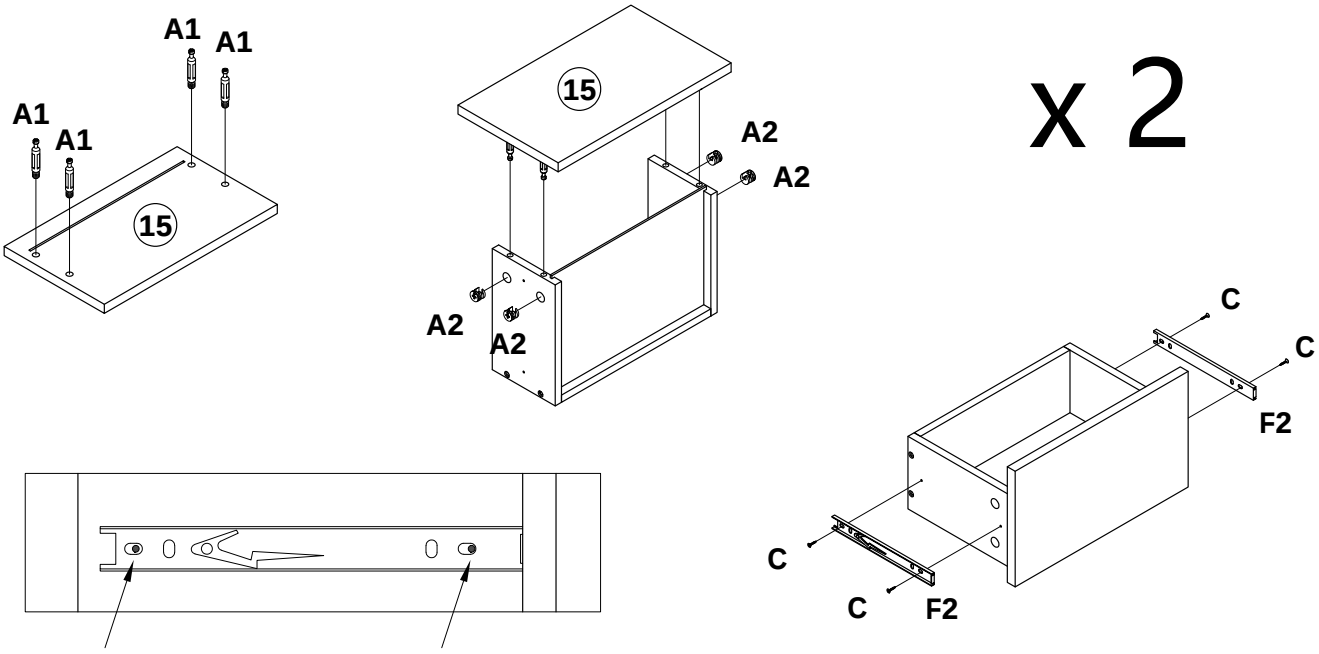

16

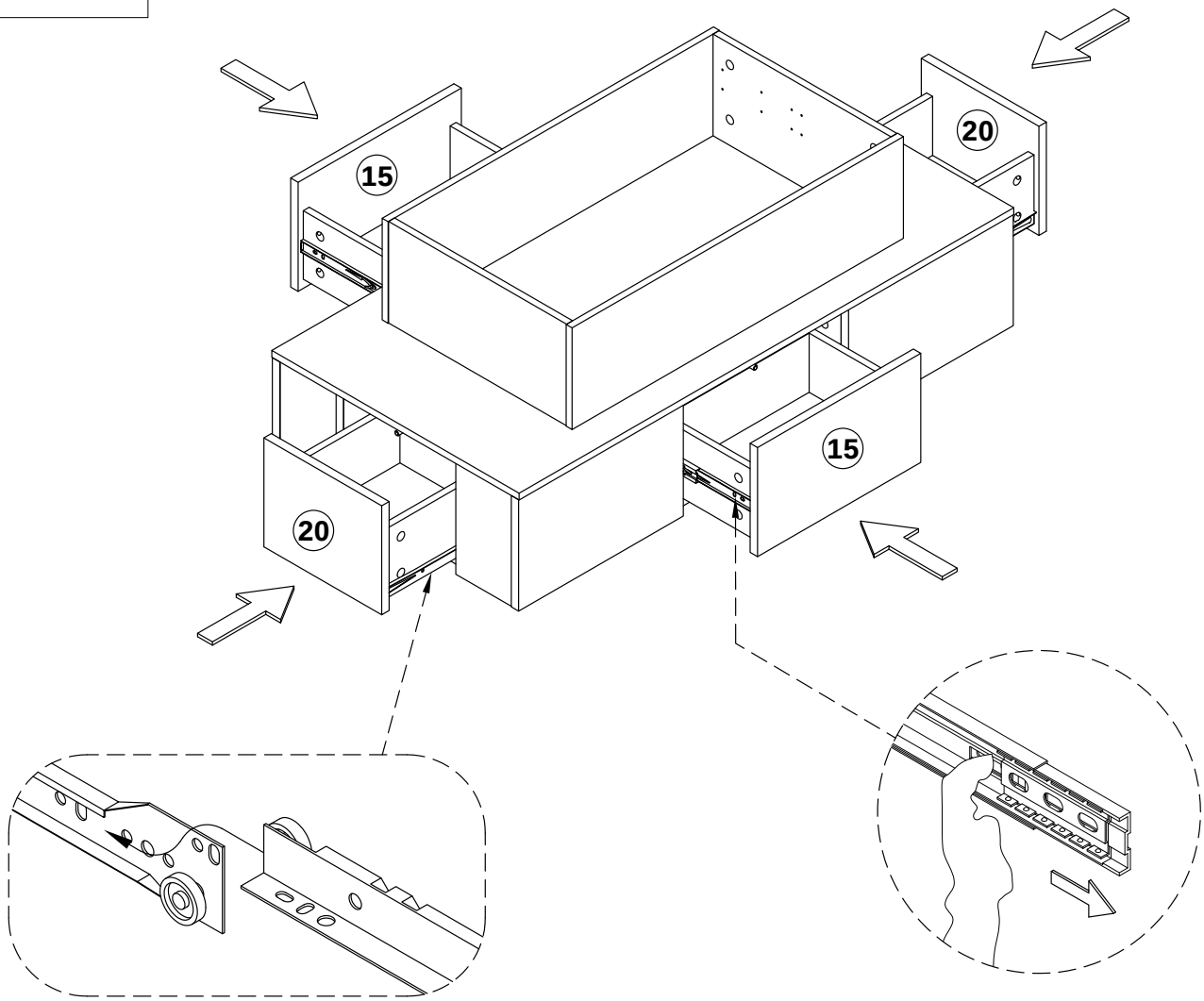

17

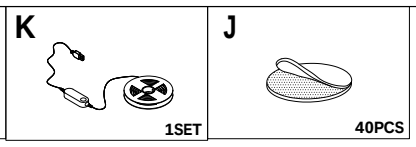

EN:Scan to download App control the Led light.
DE:Scannen, um die App zum Steuern des LED-Lichts herunterzuladen
FR:Scanner pour télécharger App contrôler la lumière Led.
ES:Analice para descargar la aplicación control de la luz Led.
IT:Scansiona per scaricare l ’ applicazione controlla la luce Led.

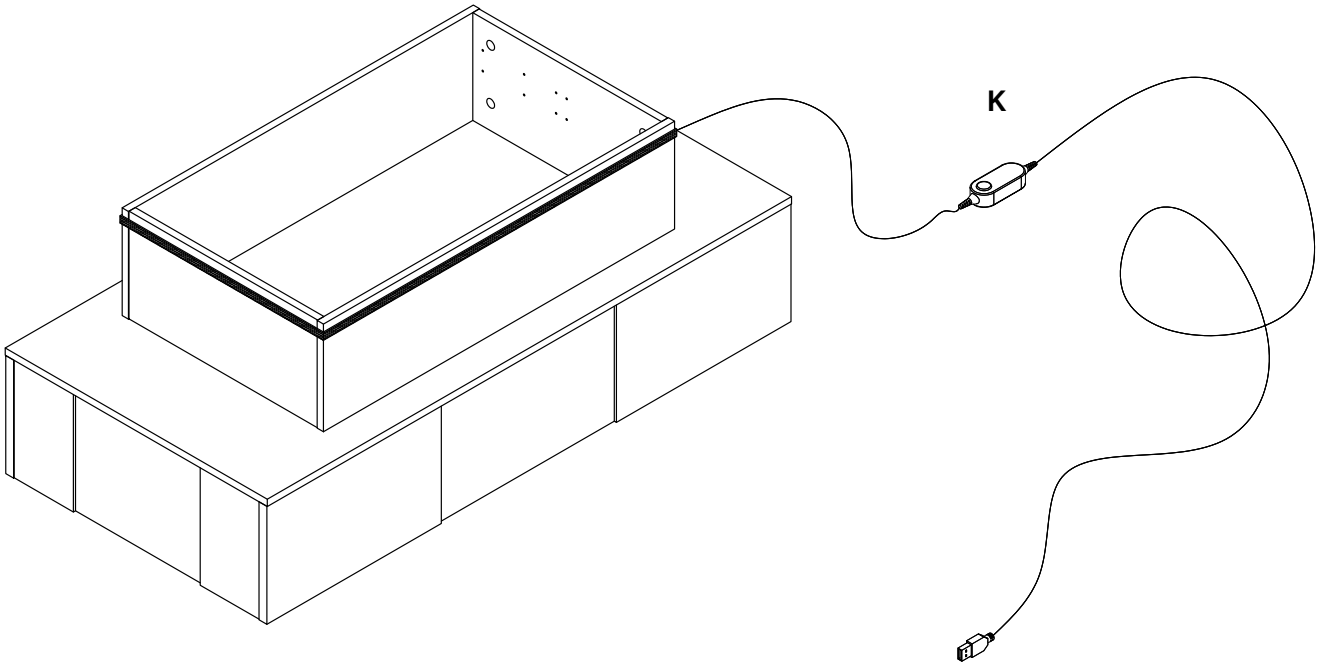

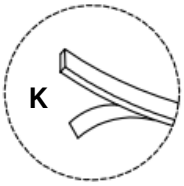

EN:Tear off the back tape
DE:Das Klebeband auf der Rückseite abziehen FR:Retirez le ruban adhésif arrière
ES:Quitar la cinta trasera
IT:Strappare il nastro posteriore

EN:In order to make the product more beautiful,please paste hardware J on the exposed holes.
DE:Um ein präzises produkt ästhetisieren zu können, fügen sie hardware J in eine entblößte öffnung ein
FR:Afin de rendre le produit plus beau, s′ il vous plaît coller le matériel J sur les trous exposés.
IT:Per rendere il prodotto più bello, incollare l′ hardware J sui fori esposti.
ES:Con el fin de hacer el producto más hermoso, por favor pega hardware J en los agujeros expuestos

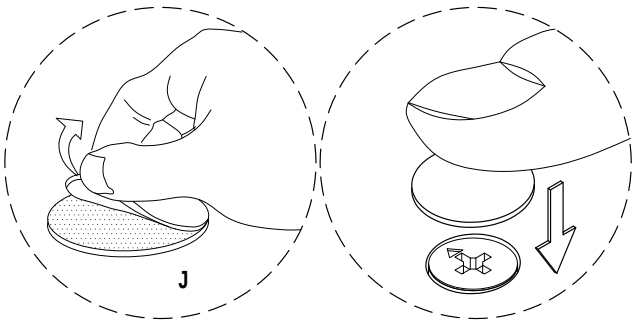

18

C	M
 3.5 x 12MM 12PCS	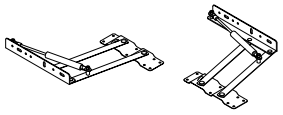 1SET

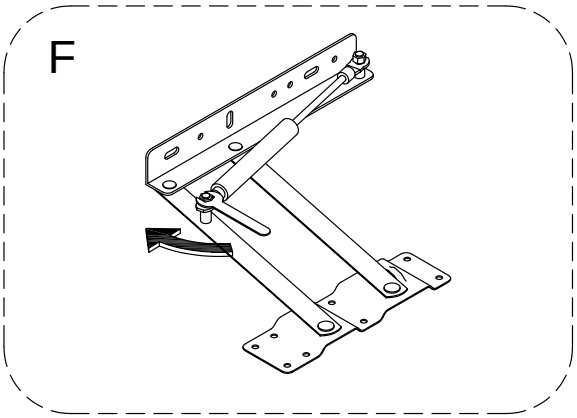

Loosen the screws here,as shown.
Lösen Sie die Schrauben hier, wie gezeigt.
Desserrez les vis ici, comme illustré.

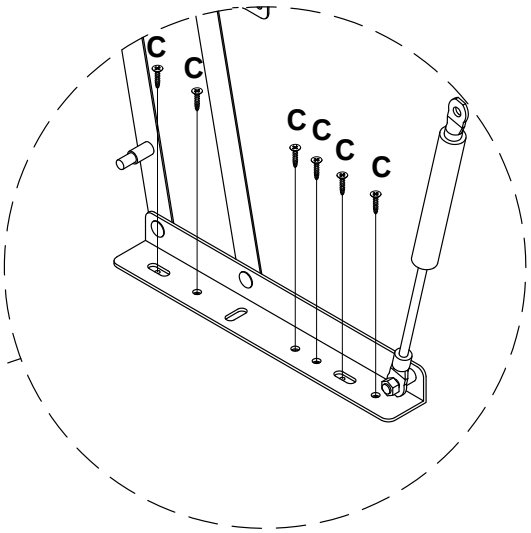

Fix the hardware M firmly on the plate 1 with the self-tapping thread C
Fixieren Sie die Hardware M fest auf der Platte 1 mit dem selbstschneidenden Gewinde C
Fixation ferme de la quincaillerie M sur la plaque 1 avec un filetage autotaraudeur C

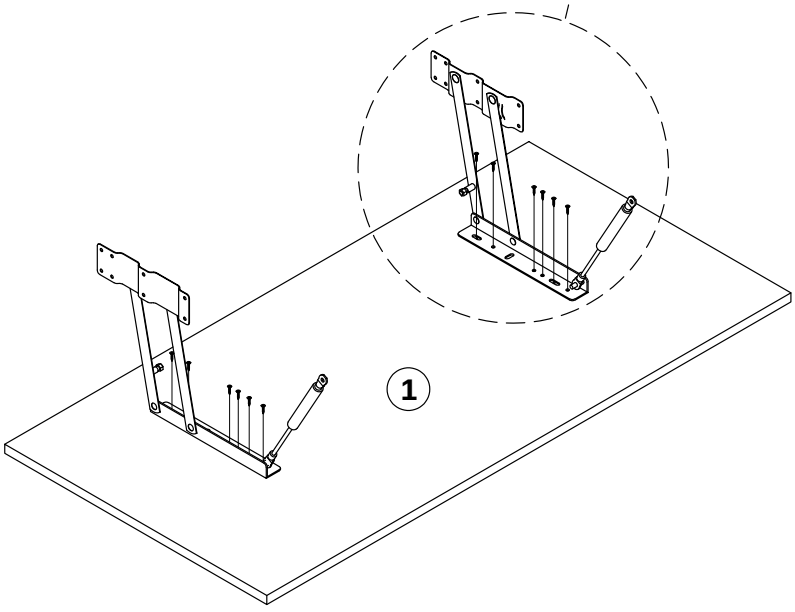

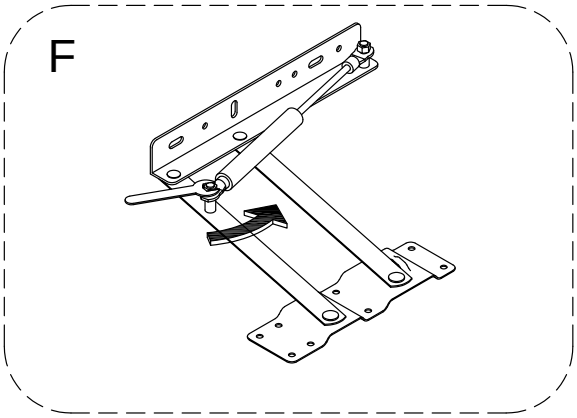

Tighten the screws on hardware M here.
Ziehe hier die Schrauben an Hardware M an.
Serrez les vis sur le Hardware M ici.

19

C



3.5 x 12MM 16PCS

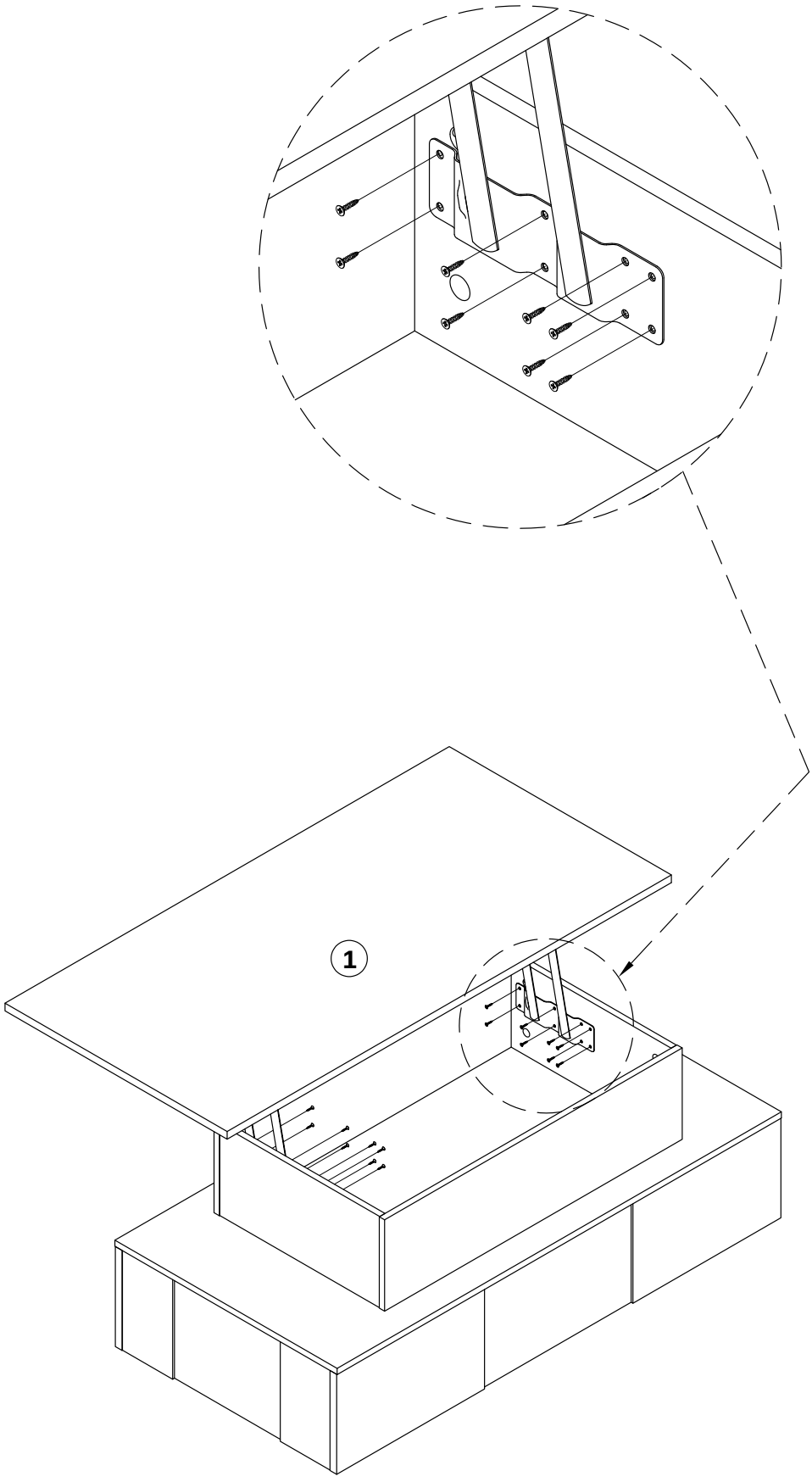

20

EN:PLEASE NOTE: Part number 1.6.7.8.15.20. is covered with atight plastic protectivefilm.If there are scratches on the product after disassembly,please don't worry,it's not product damage.Please slowly tear off the protective plastic film on the surface along the edge.After peeling off,the product becomes smooth and clean.

DE: Bitte beachten Sie:TeilNr.1.6.7.8.15.20. sind mit einerdichten Kunststoffschutzfolie abgedeckt. Wenn das Produkt nach der Demontage K ratzer aufweist,machen Sie sich bittekeine Sorgen,es handelt sich nicht um einen Produktschaden.Bitte ziehen Sie die schitzende Kunststofffolie auf der Oberflache entlang derKante langsam ab.Nach dem Abziehen wird das Produkt glatt und sauber.

FR: Veuillez noter : piece n°1.6.7.8.15.20. sont recouverts d'un film protecteur en plastique dense. Si le produit presente des rayures apres le demontage, ne vous inquietez pas.Il ne s'agit pas d' un dommage au produit. V euillez retirer lentement le film plastique protecteur sur la surface le long du bord. Apres le decollage, le produit sera lisse et propre.

IT: Nota: parten. 1.6.7.8.15.20. sono ricoperti da una densa pellicola protettiva in plastica. Se il prodotto presenta graffi dopo lo smontaggio, non preoccuparti Non si tratta di un danno al prodotto. Rimuovere lentamente la pellicola di plastica protettiva sulla superficie lungo il bordo. Dopo averla staccata, il prodotto sara liscio e pulito.

ES: Tenga en cuenta: Parte No.1.6.7.8.15.20. Estan cubiertos con una pelicula protectora de plastico densa. Si el producto tiene rayones despues del desmontaje, no se preocupe. Esto no es un dano al producto. Retire lentamente la pelicula protectora de plastico de la superficie a lo largo del borde. Despues de despegarlo, el producto quedara liso y limpio.

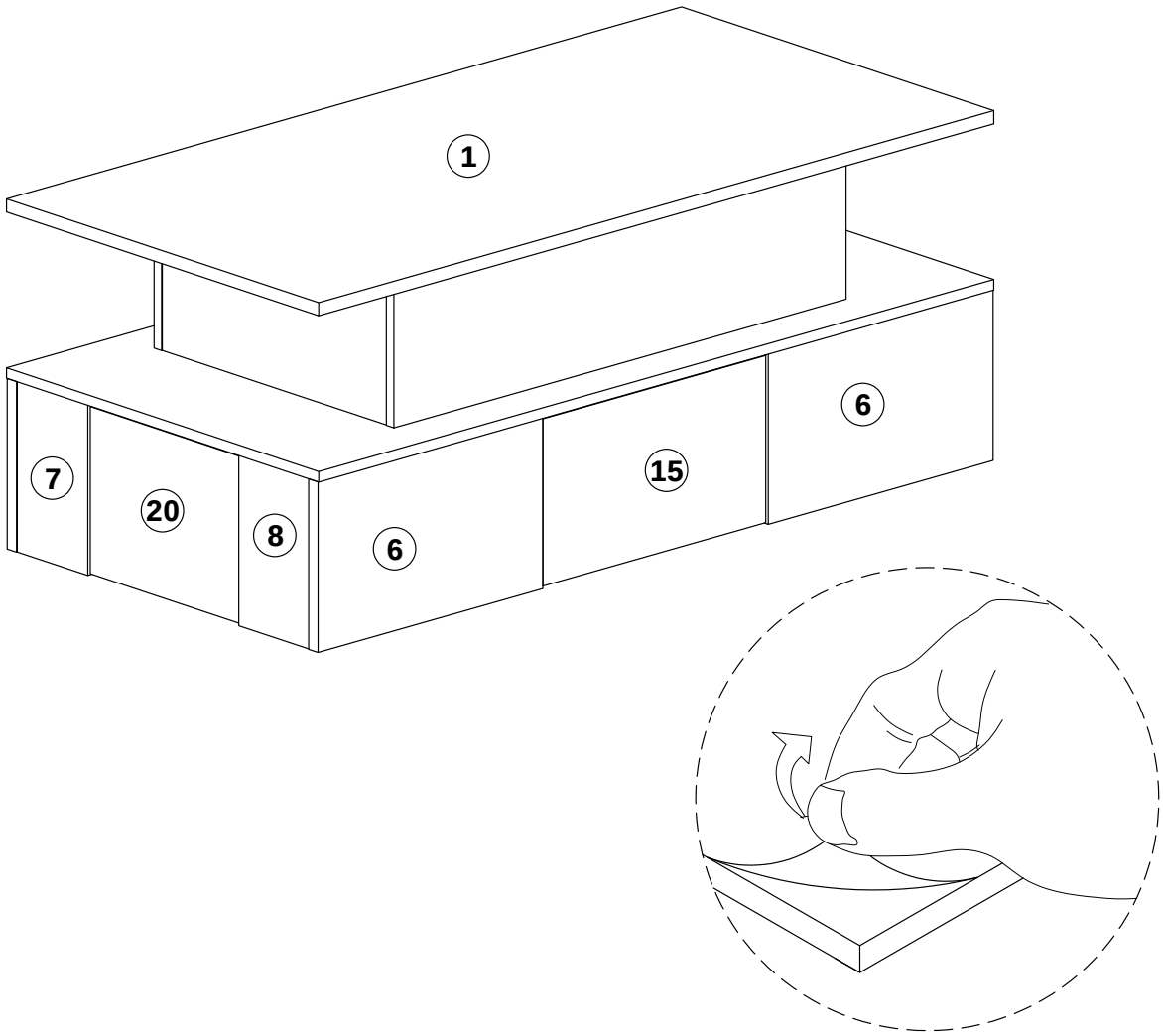

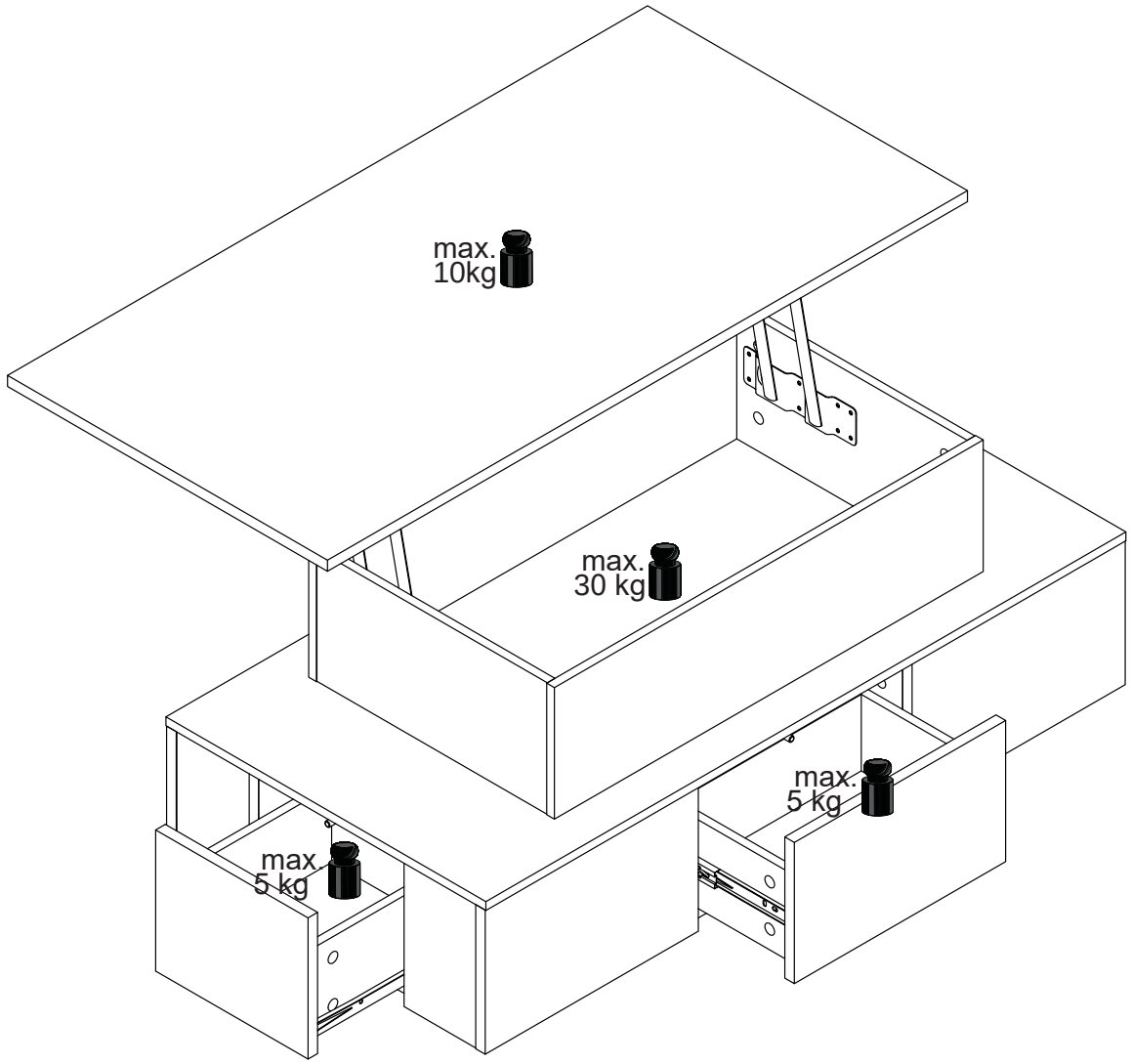
max.
10kg
max.
30 kg
max.
5 kg
max.
5 kg

Shenzhen BCTC Testing Co., Ltd.
1-2/F., Building B, Pengzhou Industrial Park, No.158, Fuyuan 1st Road,
Zhancheng, Fuhai Subdistrict, Bao'an District, Shenzhen, Guangdong, China

Test Verification of Conformity

Verification Number: BCTC2507635158C

Applicant : **Dongguan Huima Synthetic Electronics Co.,Ltd 3rd Floor, Bingding A, No.1 Jiangxing Road, Huangjiang Village, Huangjiang Town, Dongguan City, Guangdong Province China**

Manufacturer : **Dongguan Huima Synthetic Electronics Co.,Ltd 3rd Floor, Bingding A, No.1 Jiangxing Road, Huangjiang Village, Huangjiang Town, Dongguan City, Guangdong Province China**

Product Name : **2.4G conlroller**

Model/Type Reference : **HM-LY-2.4G**

Essential Requirement		Test Standards	Report No.
Art.3.1(a)	Safety	EN 61347-1:2015+A1:2021 EN 61347-2-11:2001+A1:2019	BCTC2507862687S
Art.3.1(a)	Health	EN 62479:2010 EN 50663:2017	BCTC2507635158-1E
Art.3.1(b)	EMC	ETSI EN 301 489-1 V2.2.3 (2019-11) ETSI EN 301 489-17 V3.3.1 (2024-09)	BCTC2507635158-2E
Art.3.2	Radio	ETSI EN 300 328 V2.2.2 (2019-07)	BCTC2507635158-3E

On the basis of the referenced test report(s), sample(s) tested of the above product have been found to comply with the standards harmonized with Annex II of Council Directive 2014/53/EU at the time the tests were carried out. Other standards and Directives may be relevant to the product. This verification is part of the full test report(s) and should be read in conjunction with it <them>.

Once compliance with all product relevant CE mark directives are verified, including any relevant e.g. risk assessment and production control, the manufacturer may indicate compliance by signing a Declaration of Conformity themselves and applying the mark to products identical to the tested sample(s).

CE

SHENZHEN BCTC TESTING CO., LTD.
APPROVED
Manager
2025-08-11
Report Seal

Tel: 400-788-9558 / 0755-32936262 www.chnbctc.com

This Verification is for the exclusive use of BCTC's client and is provided pursuant to agreement between BCTC and its client. BCTC's responsibility and liability are limited to the terms and conditions of the agreement. The observation and test results referenced in this Verification are relevant only to the sample tested. This Verification by itself does not imply that the material, product, or service is or has ever been under a BCTC certification program.

Verification of compliance Verification of compliance Verification of compliance Verification of compliance

Verification of Compliance

Verification No.:	MK25070091P01-C01
Name and address of Applicant:	**Shenzhen CWG Technology Co., Ltd** 3/F, Building A, Yongshenghui Industrial Park, Chuangye Road, Shiyan Street, Bao'an District, Shenzhen
Name and address of Manufacturer:	**Shenzhen CWG Technology Co., Ltd** 3/F, Building A, Yongshenghui Industrial Park, Chuangye Road, Shiyan Street, Bao'an District, Shenzhen
Product name:	**LED Strip**
Product model(s):	CWG-5050RGB-60D-5V, CWG-5050RGB-30D-12V, CWG-5050RGB-18D-12V, CWG-5050RGB-60D-24V, CWG-5050RGB-60D-12V, CWG-5050RGB-30D-5V, CWG-5050RGB-18D-5V, CWG-5050-60D-12V, CWG-5050-30D-12V, CWG-5050-60D-24V, CWG-HC5050RGB-60D-12V, CWG-HC5050RGB-30D-12V,CWG-HC5050RGB-60D-24V, CWG-HC5050-60D-12V, CWG-HC5050-30D-12V, CWG-HC5050-60D-24V, CWG-HC5050RGB-30D-5V, CWG-HC5050RGB-60D-5V, CWG-HC5050RGB-144D-5V, CWG-2835-60D-12V, CWG-2835-120D-12V, CWG-2835-60D-24V, CWG-2835-120D-24V, CWG-2835-60D-5V, CWG-2835-120D-5V
Product trademark:	创唯光

This verification confirms that the product meets the requirements of the following standard.
The conformity was demonstrated based on following standard(s) listed by European Commission as harmonized with Directive RoHS 2.0 Directive (EU) 2015/863 and (EU)2017/2102 amending Annex II to Directive 2011/65/EU

IEC 62321-1:2013	IEC 62321-3-1:2013
IEC 62321-4:2013/AMD1:2017	IEC 62321-5:2013
IEC 62321-6:2015	IEC 62321-7-1:2015
IEC 62321-7-2:2017	IEC 62321-8:2017
IEC 62321-2:2021	

The verification has been carried out in accordance with individual rules and conditions agreed with the applicant. Evaluation has been carried out in accordance with:

Test report(s) No.:	MK25070091P01-C01
Test conducted by:	TMC Testing Services (Shenzhen) Co., Ltd.
Verification issue date:	July 17, 2025

Notes:
This verification refers to the above mentioned product and its conformity in regards of above mentioned standard(s) was proven on test sample.
This verification does not imply meeting all essential requirements, assessment of the series-production or any other restricted Notified Bodies conformity assessment procedure appropriate for the product.
This verification holder shall use this verification in connection to verification of conformity and technical data relevant for the product the verification was issued.

TMC Testing Services (Shenzhen) Co., Ltd.
t:86-755-86642861 cert@tmc-lab.com www.tmc-lab.com
1st Floor, Block A1, Zone A, Xinshidai Gongrong Industrial Park, No. 2, Shihuan Road, Shiyan Street, Baoan District, Shenzhen, China

Bauart geprüft TMC Product Safety Type approved

Lab: Vivian Jiang

CE

TMC

Verification of compliance Verification of compliance Verification of compliance

TMC
Access to global market

Verification of Compliance

Verification No.:	TMC210319126-E
Name and address of Applicant:	**Shenzhen CWG Technology Co., Ltd** 5 / F, No.264 Baoshi East Road, Shiyan street, Bao'an District, Shenzhen,China 518108
Name and address of Manufacturer	**Shenzhen CWG Technology Co., Ltd** 5 / F, No.264 Baoshi East Road, Shiyan street, Bao'an District, Shenzhen,China 518108
Product name:	**LED Strip**
Rated:	DC12V
Product model(s):	CWG-5050RGB-60D-12V , additional models reference attachment
Product trademark:	创唯光

This verification confirms that the product meets the requirements of the following standard.
The conformity was demonstrated based on following standard(s) listed by European Commission as harmonized with EMC Directive 2014/30/EU.

EN IEC 55015:2019+A11:2020
IEC 61547:2020

The verification has been carried out in accordance with individual rules and conditions agreed with the applicant. Evaluation has been carried out in accordance with:

Test report(s) No.:	TMC210319126-E
Test conducted by:	TMC Testing Services (Shenzhen) Co., Ltd.
Verification issue date:	March 26, 2021

Notes:

This verification refers to the above mentioned product and its conformity in regards of above mentioned standard(s) was proven on test sample.

This verification does not imply meeting all essential requirements, assessment of the series-production or any other restricted Notified Bodies conformity assessment procedure appropriate for the product.

This verification holder shall use this verification in connection to verification of conformity and technical data relevant for the product the verification was issued.

TMC Testing Services (Shenzhen) Co., Ltd.
t:86-755-86642861 cert@tmc-lab.com www.tmc-lab.com
1st Floor, Block A1, Zone A, Xinshidai Gongrong Industrial Park, No. 2, Shihuan Road, Shiyan Street, Baoan District, Shenzhen, China

Bauart geprüft TMC Access to global market Product Safety Type approved

Lab Director
Lemon Rao

CE

Verification of compliance Verification of compliance Verification of compliance

Verification of Compliance

CWG-5050RGB-30D-12V, CWG-5050RGB-18D-12V, CWG-5050RGB-60D-24V, CWG-5050RGB-60D-5V, CWG-5050RGB-30D-5V, CWG-5050RGB-18D-5V, CWG-5050-60D-12V, CWG-5050-30D-12V, CWG-5050-60D-24V, CWG-HC5050RGB-60D-12V, CWG-HC5050RGB-30D-12V, CWG-HC5050RGB-60D-24V, CWG-HC5050-60D-12V, CWG-HC5050-30D-12V, CWG-HC5050-60D-24V, CWG-HC5050RGB-30D-5V, CWG-HC5050RGB-60D-5V, CWG-HC5050RGB-144D-5V, CWG-2835-60D-12V, CWG-2835-120D-12V，CWG-2835-60D-24V, CWG-2835-120D-24V, CWG-2835-60D-5V, CWG-2835-120D-5V

Note: This attachment only valided with Verification No.: TMC210319126-E

APP-PROGRAMMANWENDUNG





HINWEIS:

Detaillierte Anleitung im Menü "Guide"

PRODUKTPARAMETER

- Bluetooth: BLEVA 2
- Eingangsspannung: 4.5~26V
- Betriebstemperatur: -25~75 ° C
- Abmessungen: 43×22×11 mm
- Gewicht: 30g
- Max. Leistung: 144W (24V)

VERBINDUNGSSCHRITTE

①LED-Farbstreifen & Controller verbinden, Controller einschalten

②QR-Code scannen zum App-Download:

③ App starten, Controller suchen & verbinden

④Bluetooth-Drahtlossteuerung genießen

PRODUKTMERKMALE

- Direkte Handy-Steuerung (20m Reichweite)
- Automatische Verbindung in 5 Sekunden
- Musikrhythmus-Synchronisation
- Gruppensteuerung
- Helligkeits-/Geschwindigkeitsregelung
- Unterstützt bis 10m RGB(W)-Streifen
- Automatische Sprachumschaltung (DE/EN)

ANIMATIONSEFFEKTE

- Farbverläufe
- Einfarbige/ Zweifarbige Gradienten
- Monochrome/Bunte Blinkeffekte
- Farbspringen
- Musikresponsive Effekte

APP PROGRAM USAGE



Scan two-dimensional code download APP

①Connect LED color strip and controller, power on controller

②Scan two-dimensional code download APP:

③Start APP,search and connect controller

④Enjoy the Bluetooth wireless control experience



Notes:

detailed operating instructions, enter the menu "Guide":

Product Paramters:

-Bluetooth:BLEV4.2

-Input Voltage:4.5~26V

-Working Temp:-25~75℃

-Size:43*22*11mm

-Weight:30g

-Max Power:144W(24V)

LED mobile phone Bluetooth controllerProduct Features

-LED Bluetooth controller is directly via mobilephone control remote distance can reach 20m without the need to setupeasy to connect open the software within 5 seconds you can automatically connect the controller

-Flow the rhythm of the music changes

-Group control

-Brightness,speed addition and subtraction

-Maximum can be 10 meters RGB(W)strip

-The software shows that the text is based onthe language of the mobile phone set up automatic transformation of Chinese and English

ANIMATION EFFECTS:

-Colorful gradient

-All kinds of monchrome,double color gradient

-All kinds of monochrome,double color,colorfull flashing

-Colorful jump

-Follow the thythm of the music chagnes

APP-PROGRAMMANWENDUNG

Afficher la liste des lampes Farbrad

Changer la Roue chromatique



Afficher les paramètres

Ajuster la couleur

Cliquez sur l'icône carrée pour ajuster la couleur.

Changer d'interface par clic



REMARQUE :
Guide détaillé dans le menu "Guide"

CARACTÉRISTIQUES

- Bluetooth : BLEVA 2
- Tension d'entrée : 4.5~26V
- Température : -25~75° C
- Dimensions : 43×22×11 mm
- Poids : 30g
- Puissance max : 144W (24V)

ÉTAPES DE CONNEXION

① Connecter bande LED & contrôleur, allumer

② Scanner QR code pour télécharger l'app :

③ Lancer l'app, rechercher & connecter

④ Profiter du contrôle Bluetooth sans fil

FONCTIONNALITÉS

- Contrôle direct par smartphone (20m)
- Connexion automatique en 5 secondes
- Synchronisation musicale
- Contrôle de groupe
- Réglage luminosité/vitesse
- Prise en charge bandes ≤10m RGB(W)
- Basculage automatique FR/EN

EFFETS D'ANIMATION

- Dégradés de couleurs
- Dégradés uni/bicolores
- Clignotements mono/colorés
- Saut de couleurs
- Effets réactifs à la musique

UTILIZZO APP

Mostra lista lampade

Cambia ruota colori



Visualizza impostazioni

Regolare il colore

Regola colore con icona quadrata

Cambia interfaccia cliccando

PASSI CONNESSIONE

① Collega striscia LED & controller, accendi

② Scansiona QR code per scaricare APP:

③ Avvia APP, cerca & connetti controller

④ Goditi controllo wireless Bluetooth



NOTA:

Guida completa nel menu "Guide"

SPECIFICHE:

- Bluetooth: BLEVA 2
- Tensione ingresso: 4.5~26V
- Temperatura: -25~75° C
- Dimensioni: 43×22×11 mm
- Peso: 30g
- Potenza max: 144W (24V)

CARATTERISTICHE

- Controllo diretto smartphone (20m)
- Connessione automatica in 5 secondi
- Sincronizzazione ritmo musicale
- Controllo di gruppo
- Regolazione luminosità/velocità
- Supporto strisce ≤10m RGB(W)
- Auto switch IT/EN

EFFETTI ANIMAZIONE:

- Sfumature colore
- Gradienti mono/bicolori
- Luci lampeggianti mono/colorate
- Salto colori
- Effetti reattivi alla musica

USO DE LA APLICACIÓN

Mostrar lista de ____
Lámparas
Cambiar rueda de color



Ver ajustes

Ajustar el color

CliAjustar color
con icono cuadrado

Cambiar interfaz
haciendo clic _____

PASOS DE CONEXIÓN

① Conectar tira LED y controlador, encender

② Escanear QR para descargar APP:

③ Iniciar APP, buscar y conectar

④ Disfrutar control inalámbrico Bluetooth



NOTA:

Guía completa en menú "Guide"

ESPECIFICACIONES:

- Bluetooth: BLEVA 2
- Voltaje entrada: 4.5~26V
- Temperatura: -25~75° C
- Tamaño: 43×22×11 mm
- Peso: 30g
- Potencia máx: 144W (24V)

CARACTERÍSTICAS

- Control directo móvil (20m alcance)
- Conexión automática en 5 segundos
- Sincronización ritmo musical
- Control grupal
- Ajuste brillo/velocidad
- Soporte tiras ≤10m RGB(W)
- Auto cambio ES/EN

EFECTOS DE ANIMACIÓN:

- Degradados de color
- Transiciones mono/bicolores
- Destellos monocromáticos/color
- Salto de colores
- Efectos reactivos a música