ROYALLA

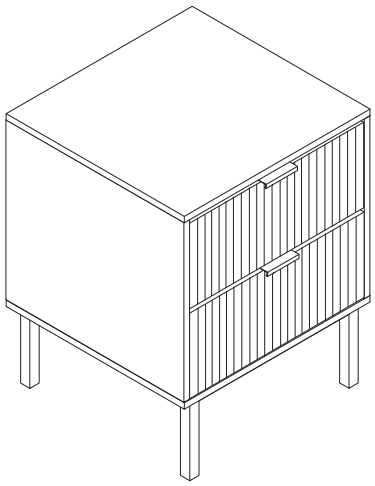

1/14

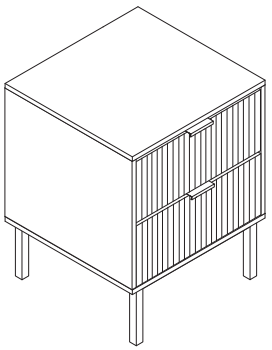

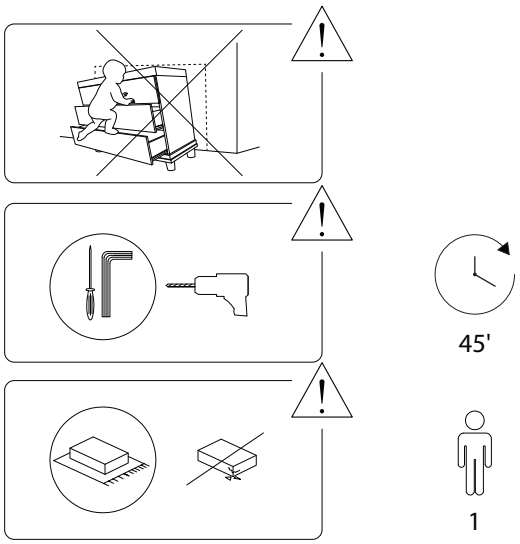

2/14

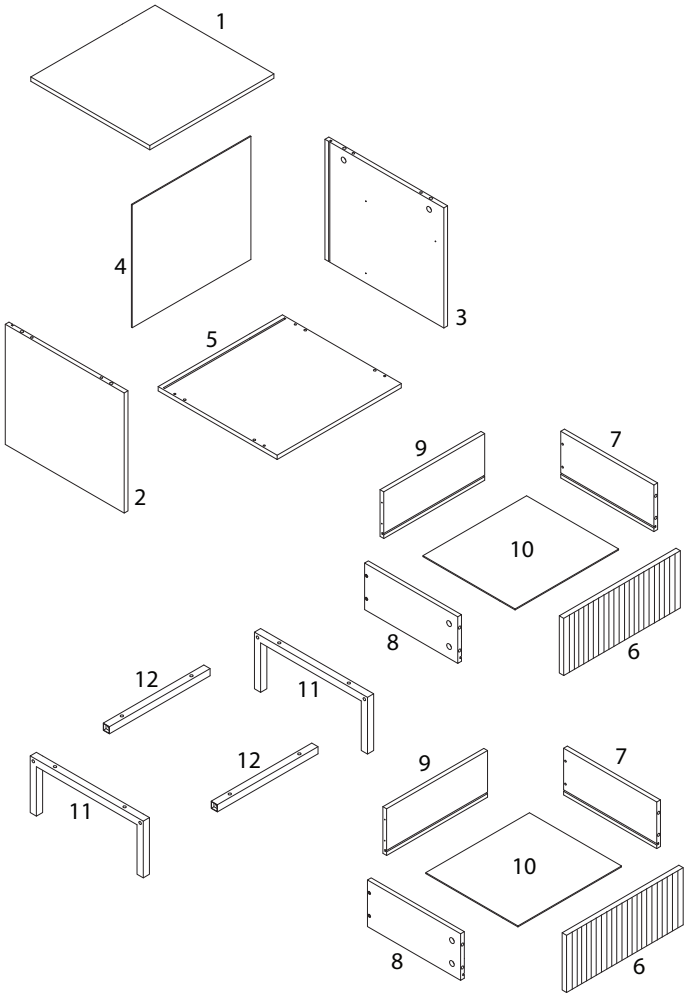

3/14

1		2			
x 1		x 1			
3		4			
x 1		x 1			
5		6			
x 1		x 2			
7	8	9			
x 2	x 2	x 2			
10	11	12			
x 2	x 2	x 2			

4/14

2916/ROYALLA-VER.3/050126/

A	B	C
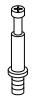		
x 12	x 12	x 8
D	**E**	**F**
 M3 x 12	 M4 x 30	 M4
x 20	x 20	x 1
G	**H**	**I**
 M6 x 40	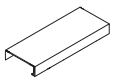	
x 4	x 2	x 4
J	**K**	**L1**
 M3 x 14	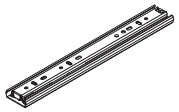	 M4 x 12
x 4	x 4	x 1
L2	**L3**	**L4**
 M4 x 35		
x 1	x 1	x 1

5/14

1

1	2	3	6	A	C
x 1	x 1	x 1	x 2	x 12	x 8

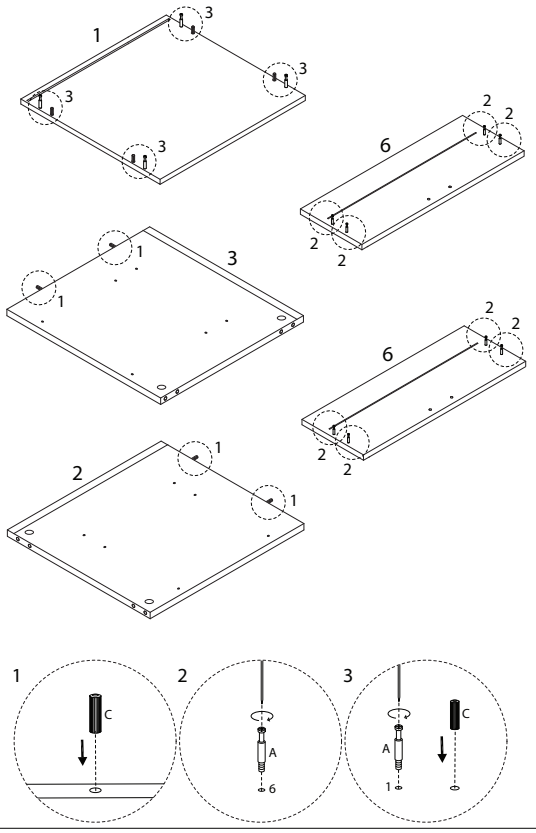

6/14

2 x 2

H	D
	 M3 x 12
x 1	x 2

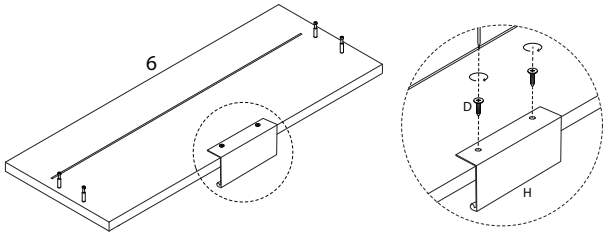

4 x 2

10

x 1

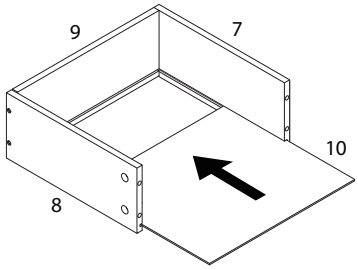

3 x 2

7	8	9	E
			 M4 x 30
x 1	x 1	x 1	x 4

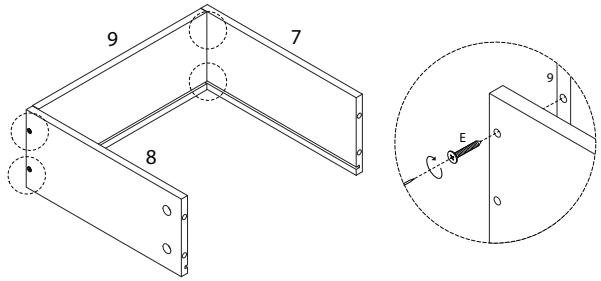

7/14

5 x 2

B

x 4

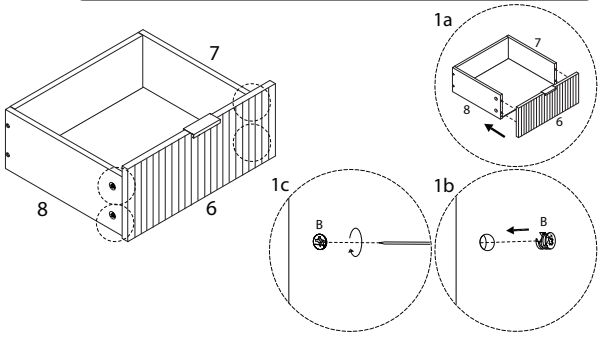

8/14

6

K

x 4

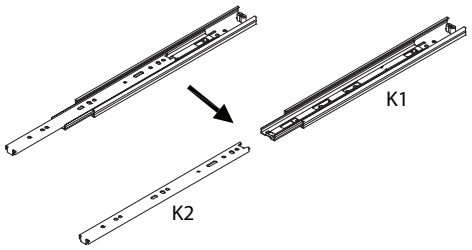

7

D

M3 x 12

x 8

K1

x 4

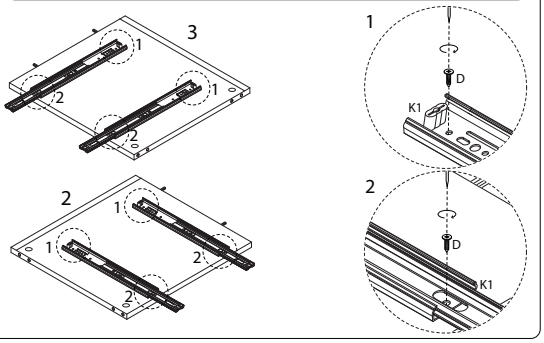

8

B

x 4

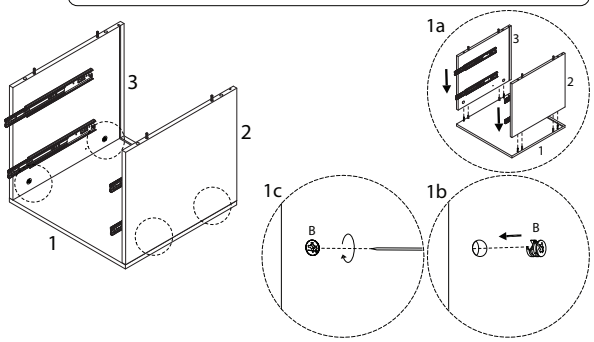

9

4

x 1

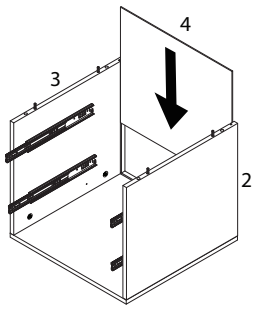

10

5

x 1

E

M4 x 30

x 4

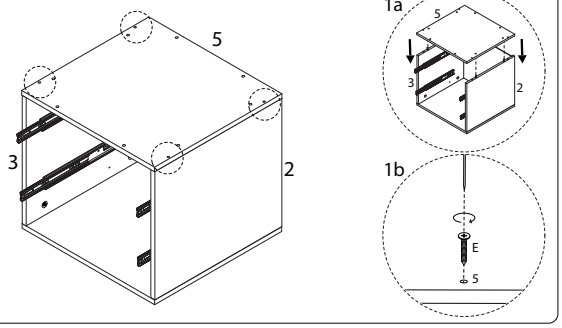

11

11

x 2

12

x 2

F

M4

x 1

G

M6 x 40

x 4

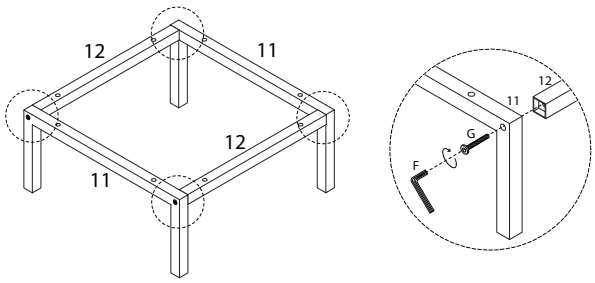

12

E

M4 x 30

x 8

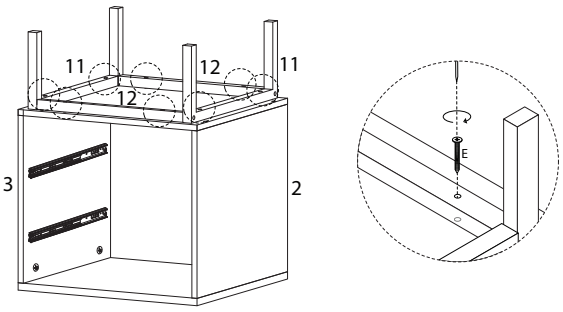

13 x 2

D

M3 x 12

x 4

K2

x 2

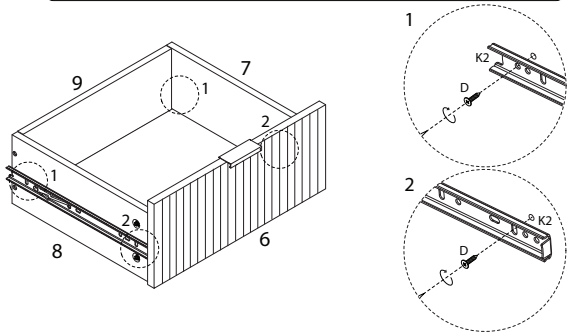

14

I	J
	
x 4	x 4

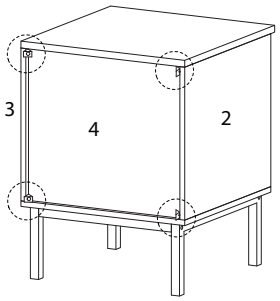

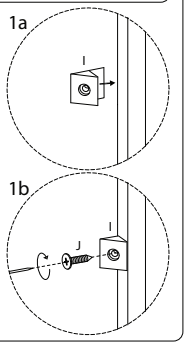

15

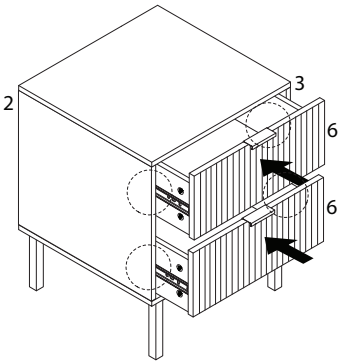

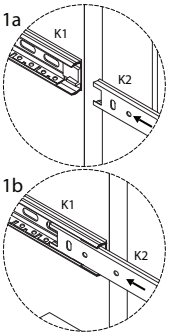

2916/ROYALLA-VER.3/050126/

16

L1	L2	L3	L4
			
M4 x 12	M4 x 35		
x 1	x 1	x 1	x 1

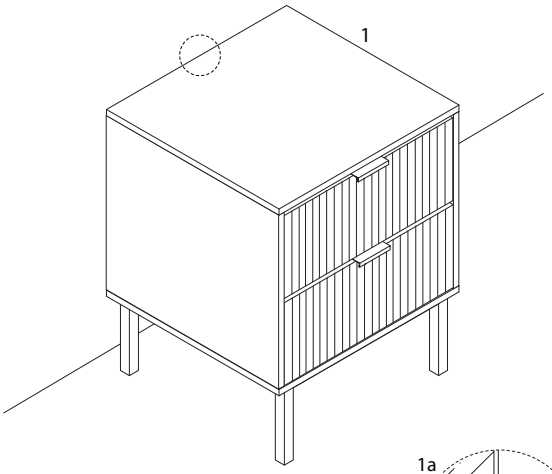

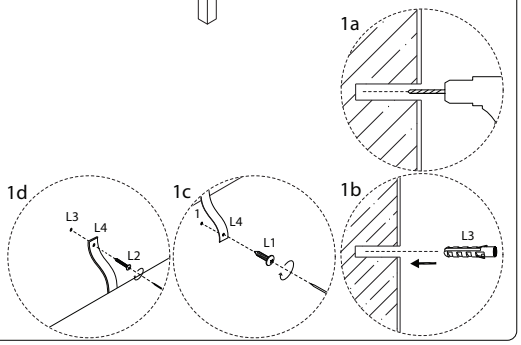

2916/ROYALLA-VER.3/050126/