LILOET

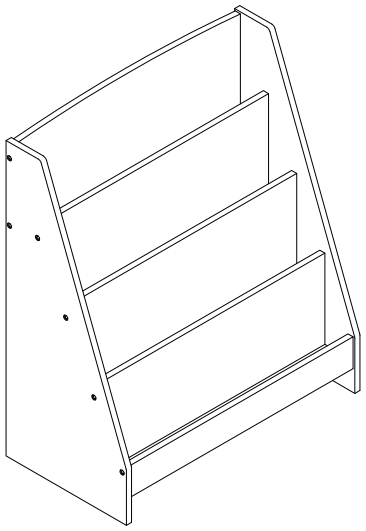

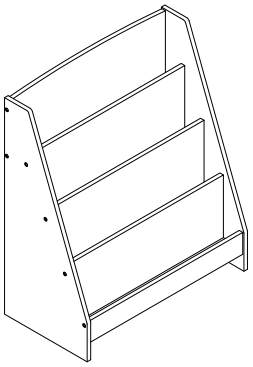

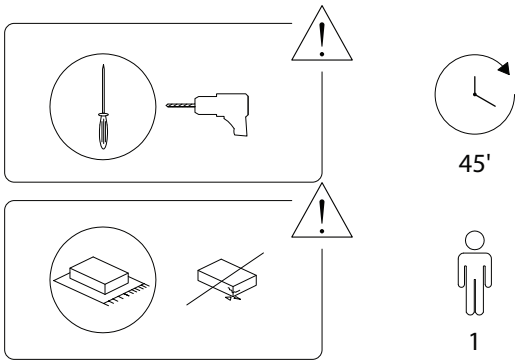

1/7

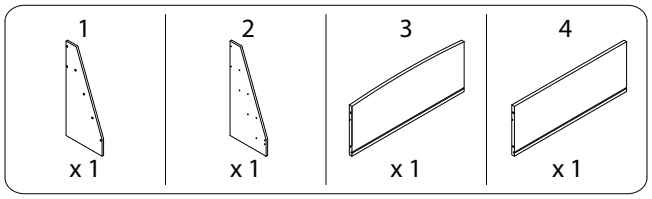

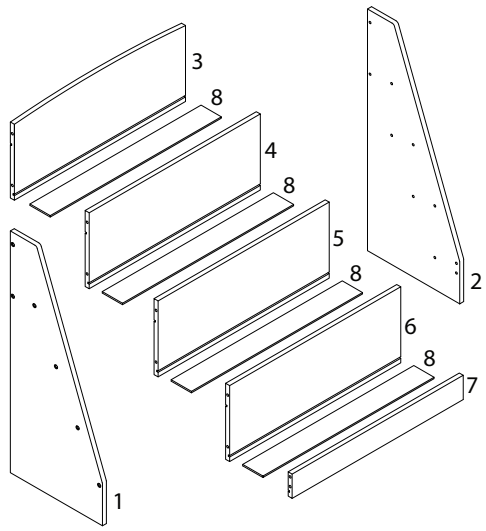

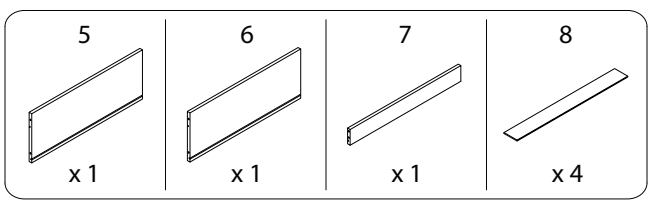

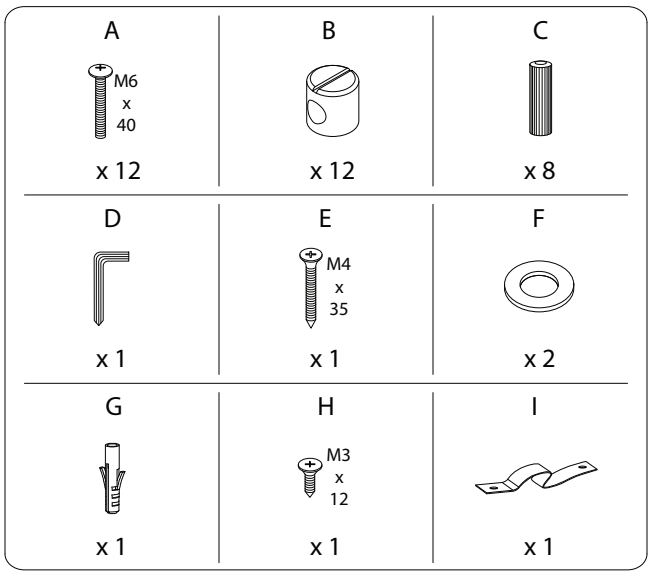

2/7

3/7

1

4	5	6	7	C
x 1	x 1	x 1	x 1	x 8

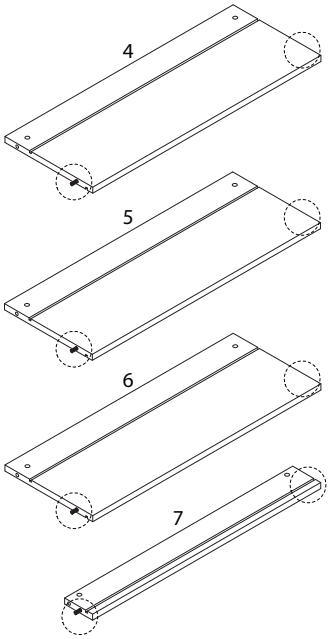

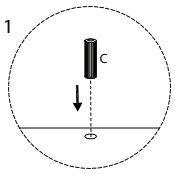

2

1	3	A	B
x 1	x 1	M6 x 40 x 6	x 6

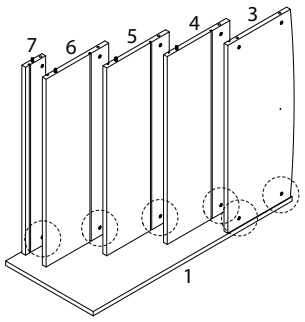

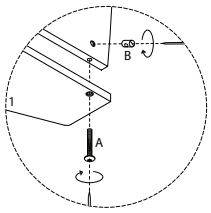

3

8
x 4

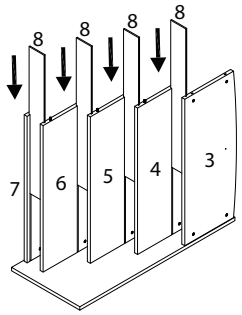

4

2	A	B
x 1	M6 x 40 x 6	x 6

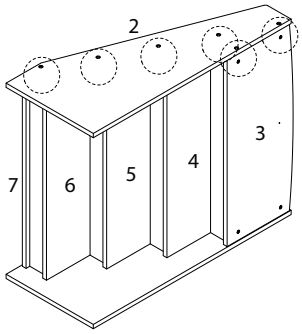

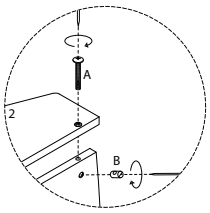

5

F	H	I
x 1	M3 x 12 x 1	x 1

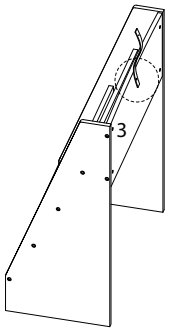

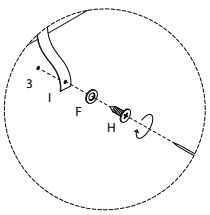

6

E	F	G
M4 x 35 x 1	x 1	x 1

