BINGARA

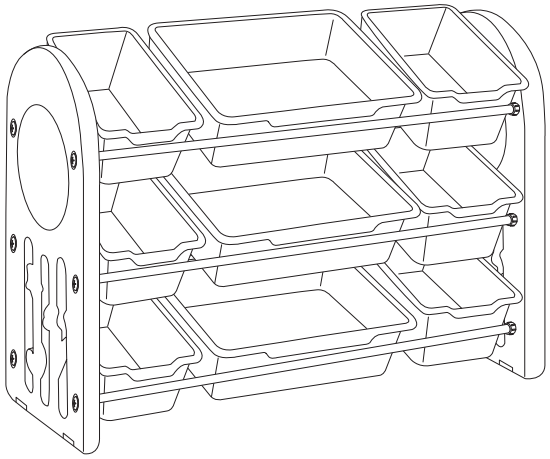

1/6

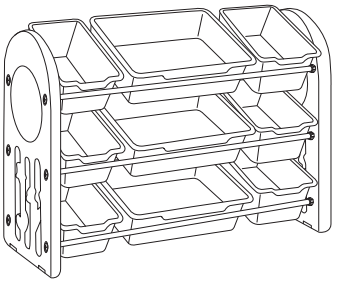

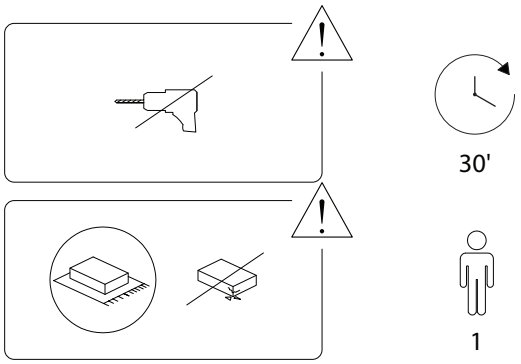

2/6

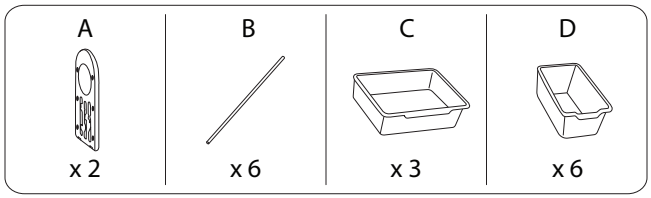

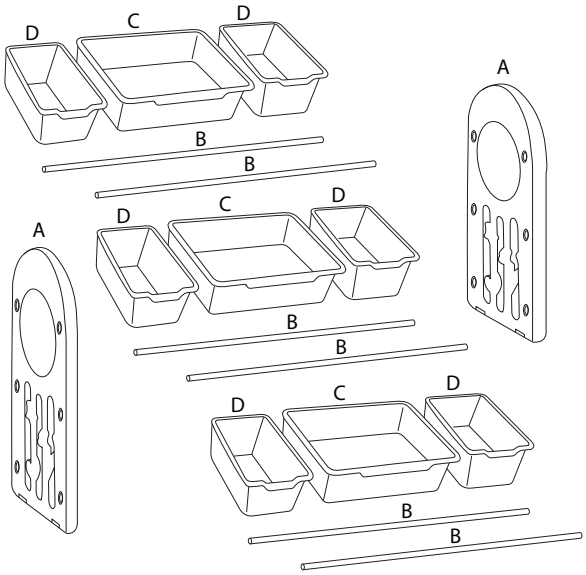

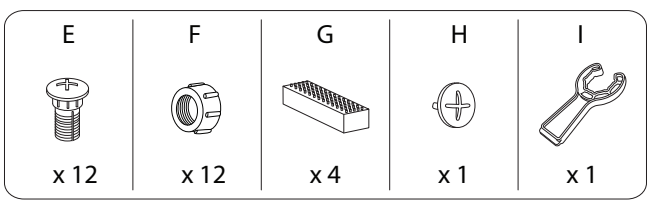

3/6

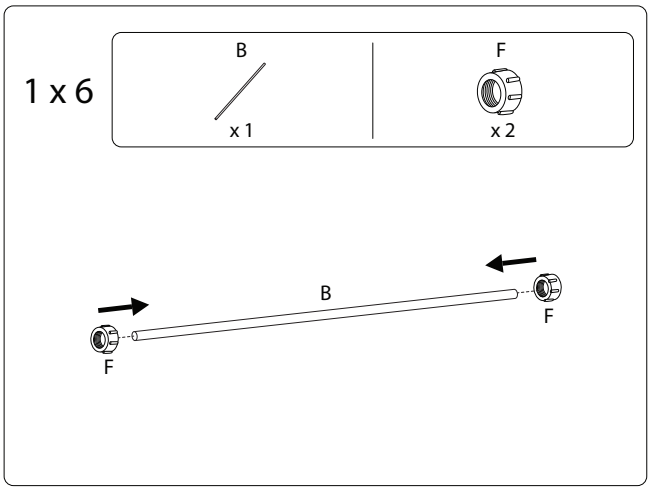

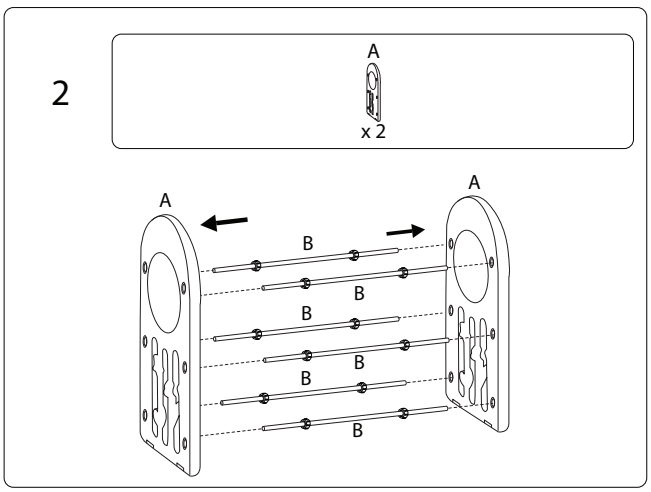

4/6

3

E	H	I
x 12	x 1	x 1

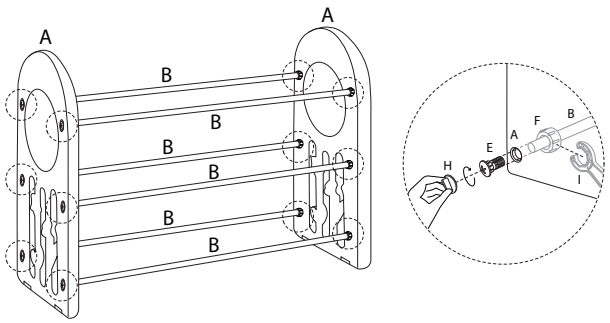

4

G
x 4

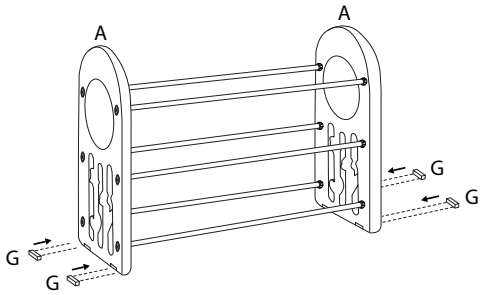

5

C	D
x 3	x 6

