ATJONI

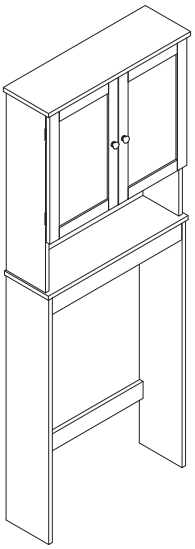

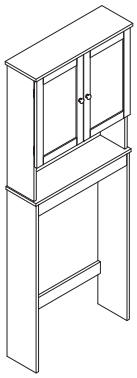

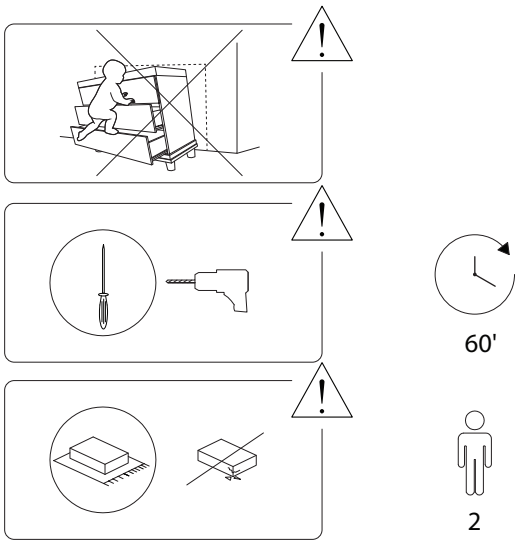

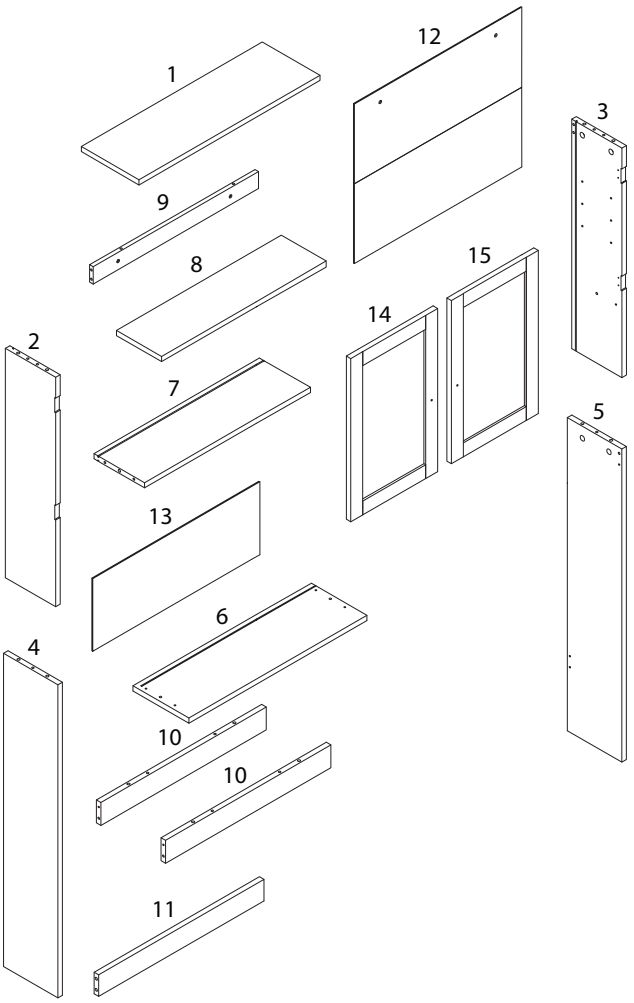

1 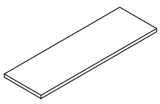 x 1	2  x 1	3  x 1
4  x 1	5  x 1	6 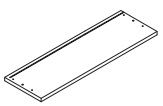 x 1
7 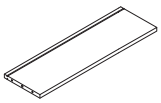 x 1	8 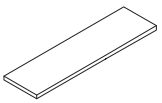 x 1	9 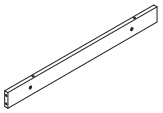 x 1
10 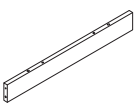 x 2	11 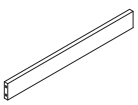 x 1	12 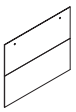 x 1
13 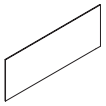 x 1	14 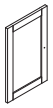 x 1	15 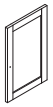 x 1

A	B	C
		
x 26	x 22	x 22
D	**E**	**G**
 M4 x 30	 M3 x 12	
x 4	x 18	x 4
H1	**H2**	**K1**
	 M4 x 16	
x 2	x 2	x 1
K2	**L**	**M**	**N1**
 M3 x 14			
x 2	x 4	x 4	x 6
N2	**P**	**Q1**	**Q2**
 M3 x 16			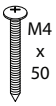 M4 x 50
x 6	x 2	x 2	x 2

2813/ATJONI/021026/

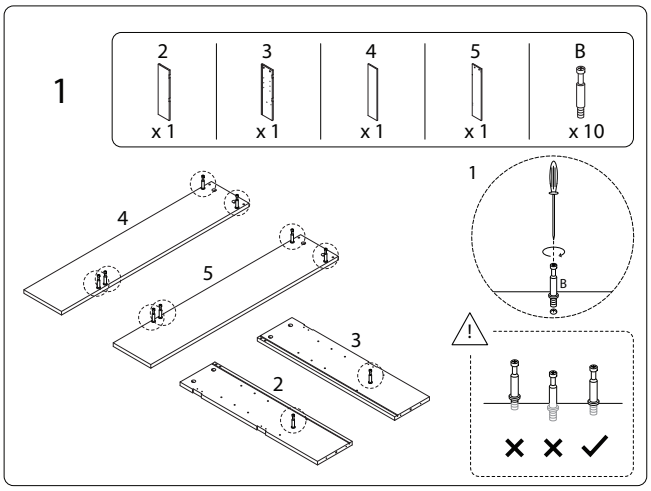

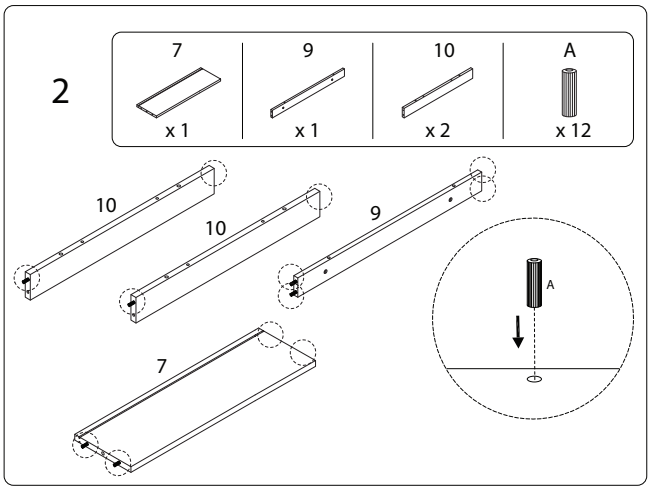

2813/ATJONI/021026/

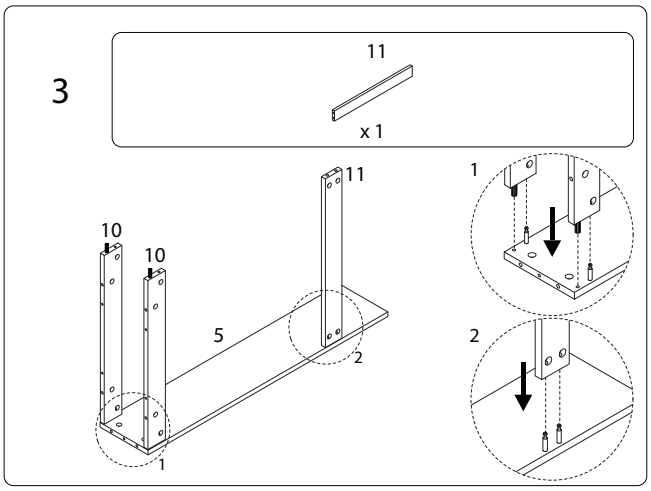

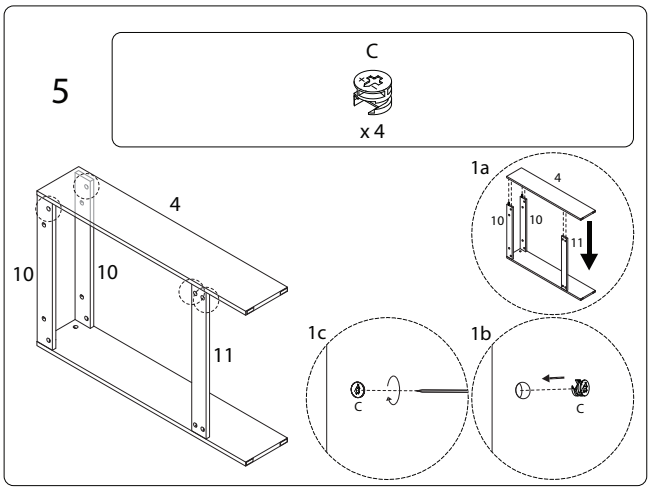

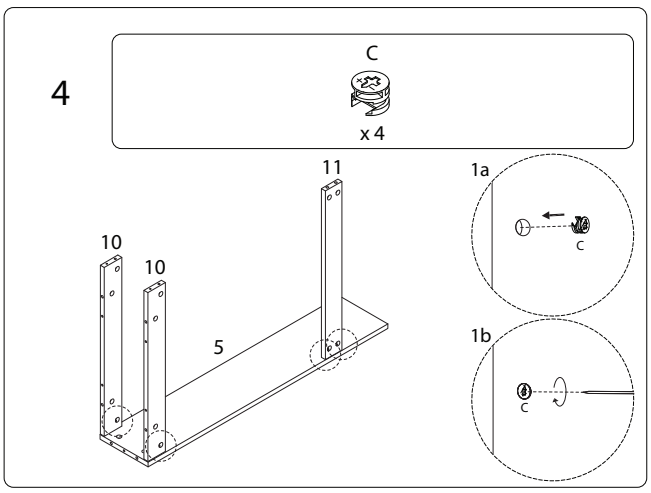

2813/ATJONI/021026/

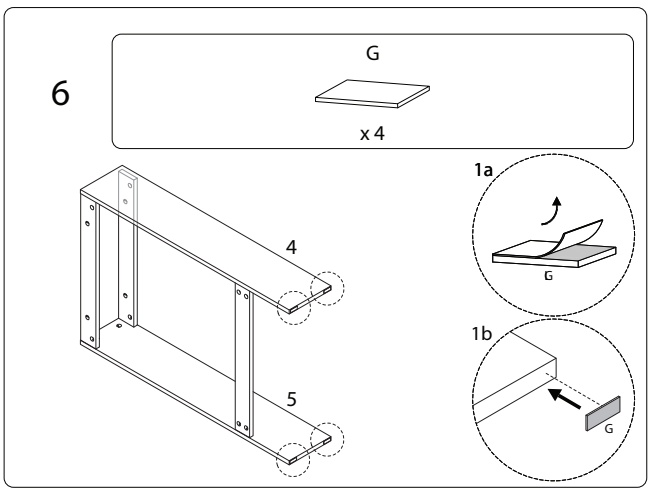

2813/ATJONI/021026/

7

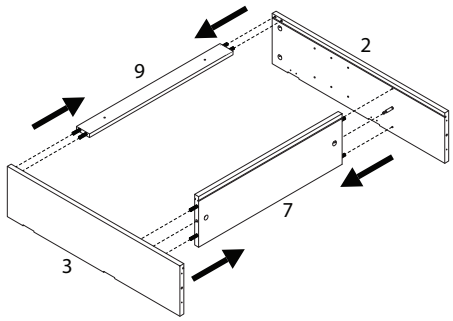

8

C

x 2

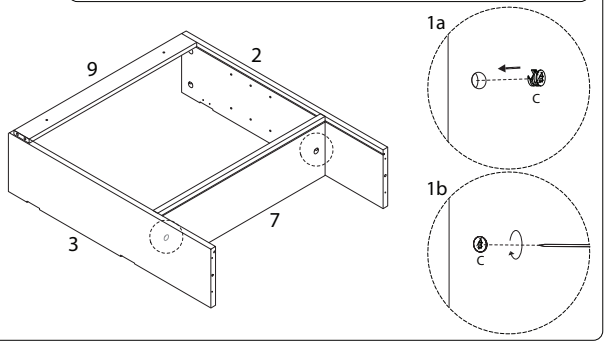

9

13	A
x 1	x 2

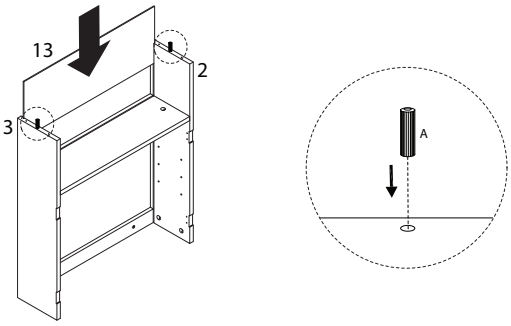

10

1	6	B	K1	K1
x 1	x 1	x 12	x 1	M3 x 14 x2

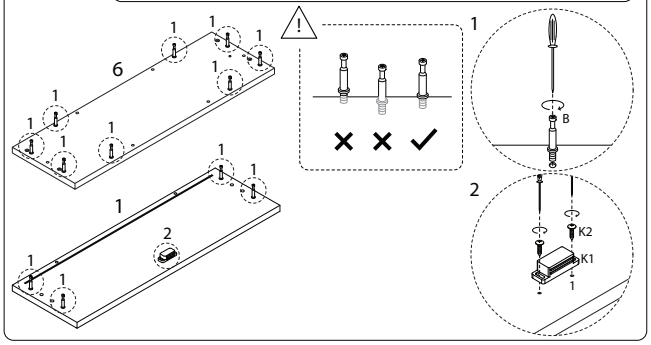

9

D

M4 x 30

x 4

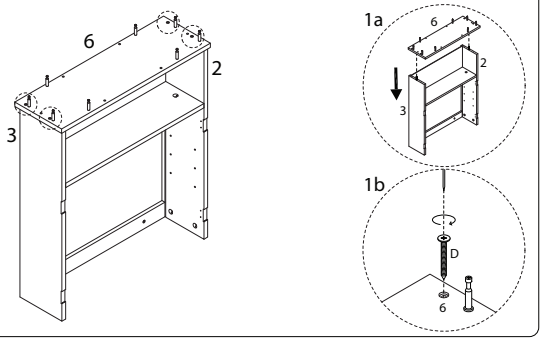

11

C

x 4

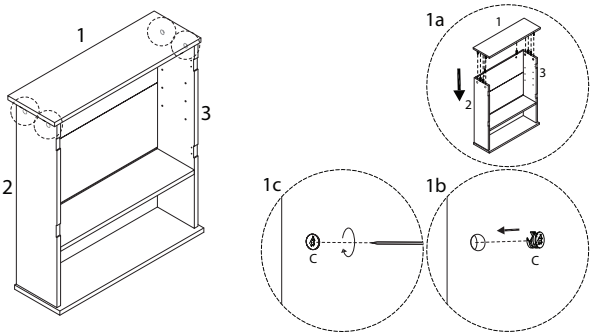

10

12	A
x 1	x 6

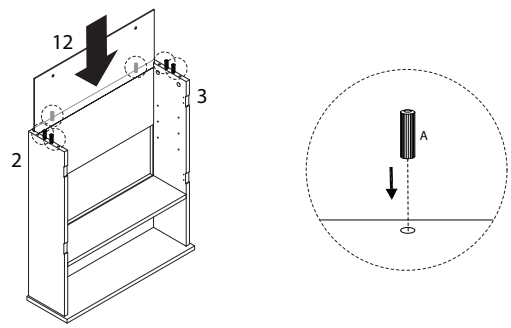

12

14	15	E	H1	H2	L	P
x 1	x 1	M3 x 12 x 10	x 2	M4 x 16 x 2	x 4	x 2

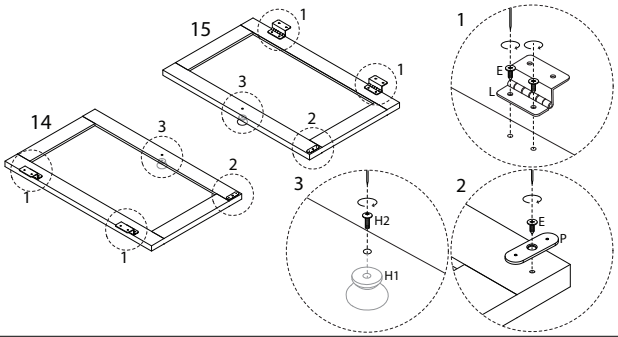

13

A
x 6

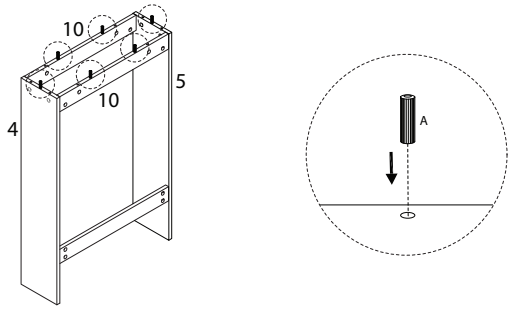

14

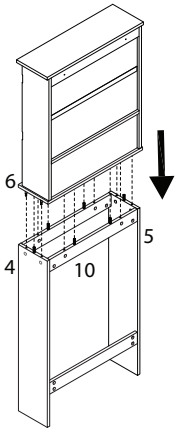

15

C
x 8

N1
x 6

N2
M3 x 16
x 6

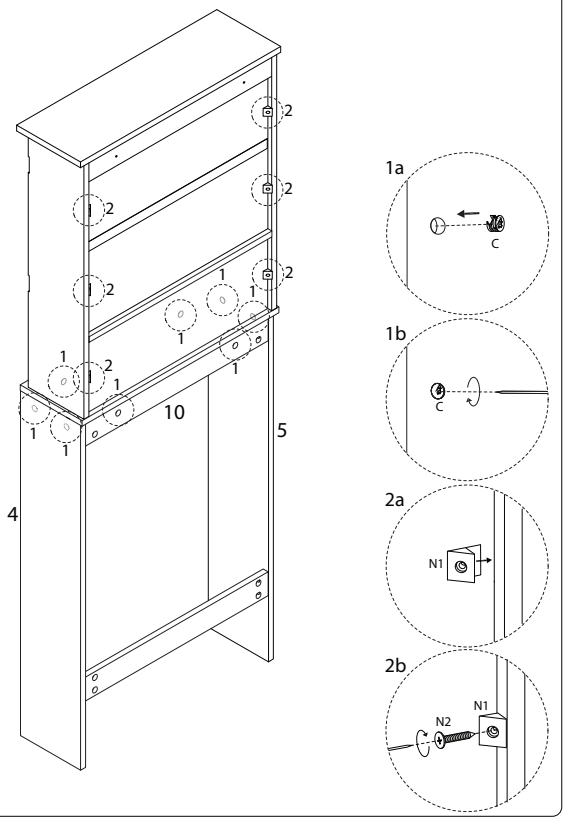

16

M
x 4

Q1
x 2

Q1
M4 x 50
x 2

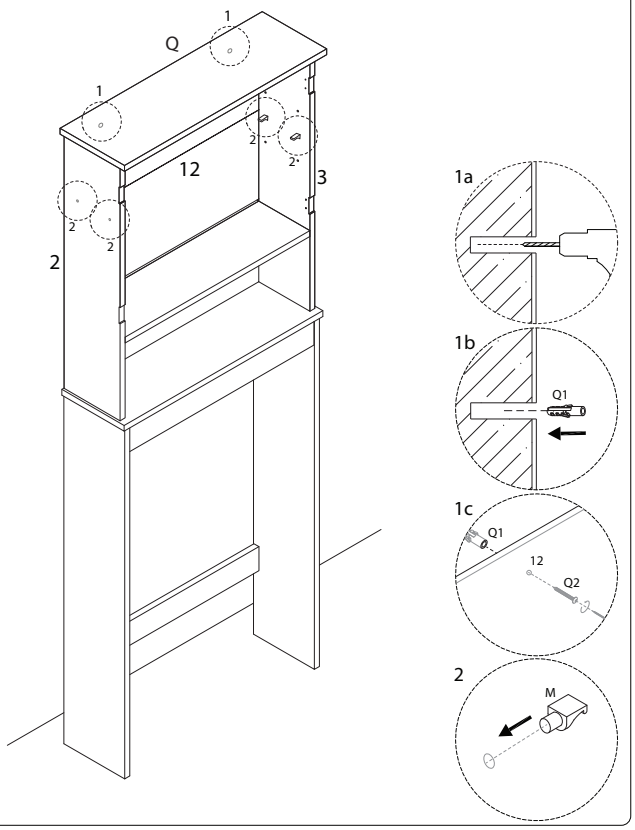

17

8
x 1

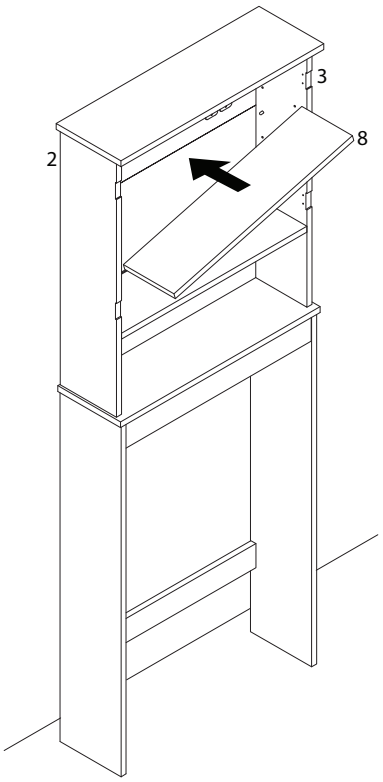

17

E

M3
x
12

x 8

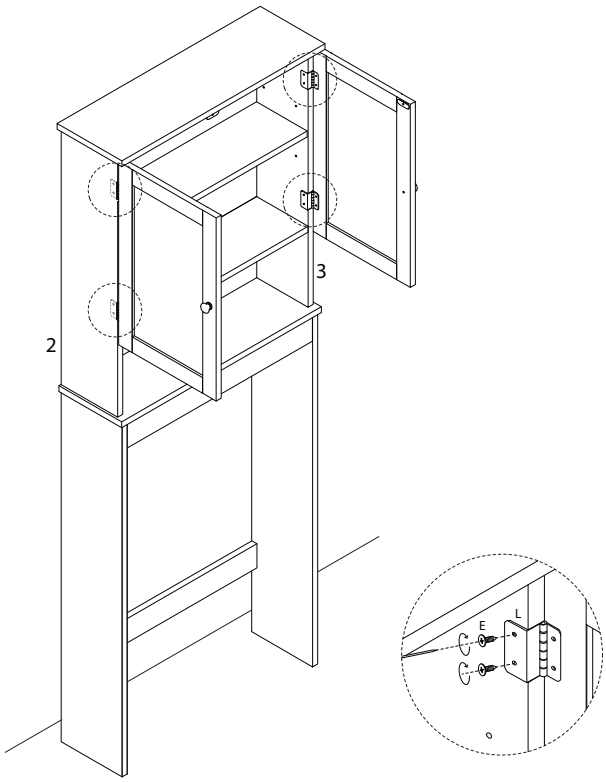

2813/ATJONI/021026/