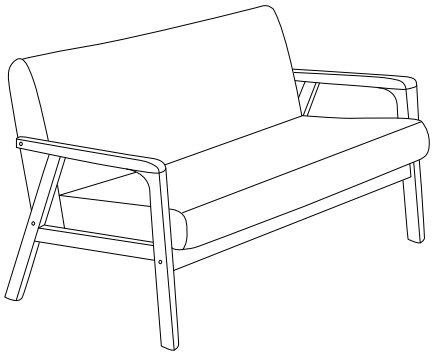

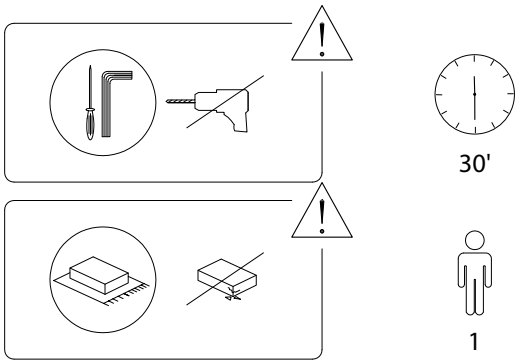
30'
1

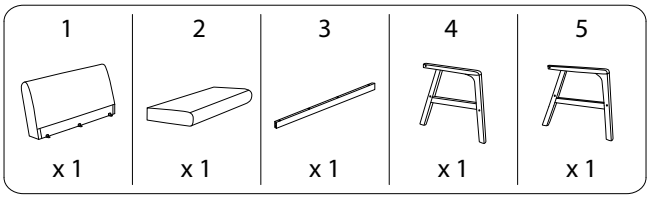
1
x 1
2
x 1
3
x 1
4
x 1
5
x 1

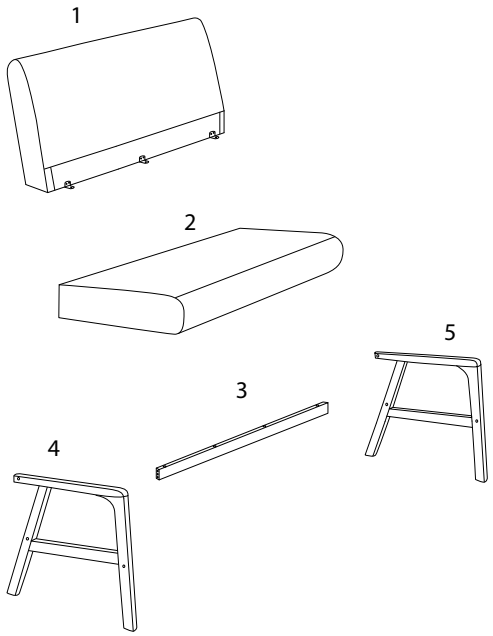
1
2
5
3
4

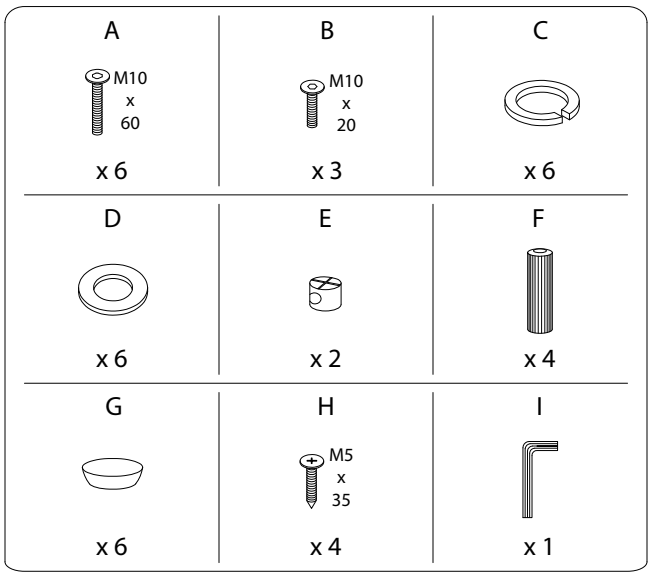
A
M10 x 60
x 6
B
M10 x 20
x 3
C
x 6
D
x 6
E
x 2
F
x 4
G
x 6
H
M5 x 35
x 4
I
x 1

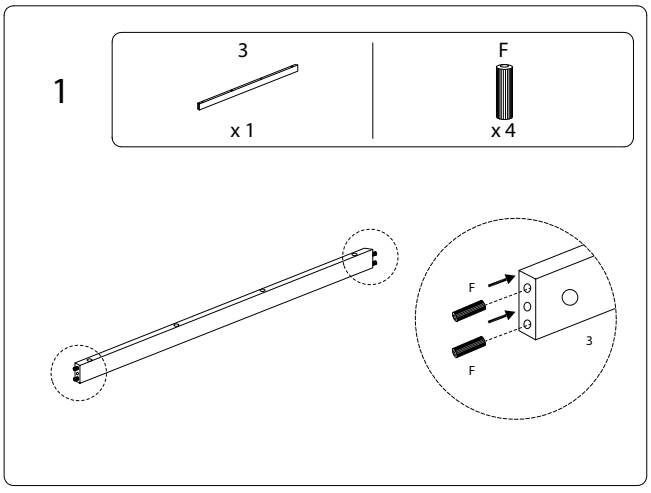
1
3
x 1
F
x 4
F
F
3

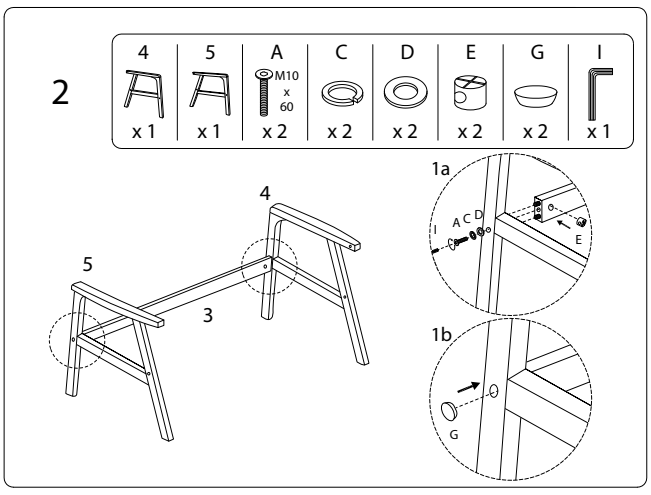
2
4
x 1
5
x 1
A
M10 x 60
x 2
C
x 2
D
x 2
E
x 2
G
x 2
I
x 1
4
5
3
1a
A C D
I
E
1b
G

3

1	A	C	D	G	I
	 M10 x 60				
x 1	x 4	x 4	x 4	x 4	x 1

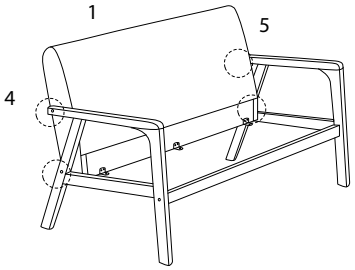

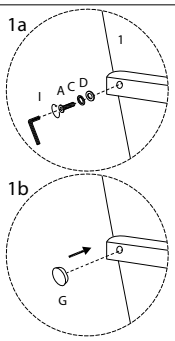

4

2	B	H	I
	 M10 x 20	 M5 x 35	
x 1	x 3	x 4	x 1

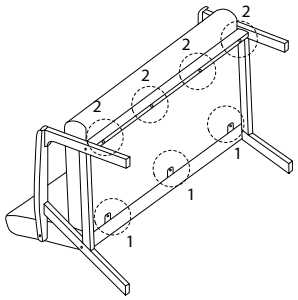

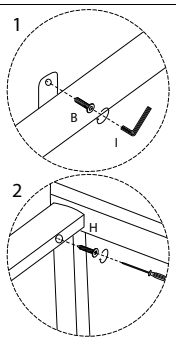

1386/ASNES.3ST/080321/