B

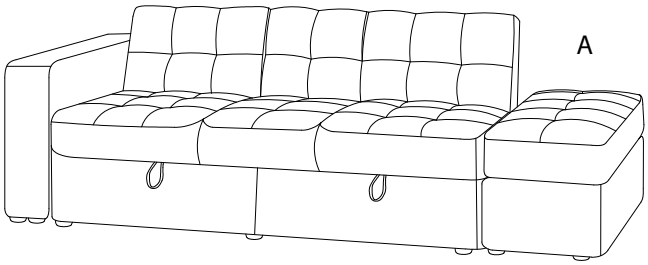



10'

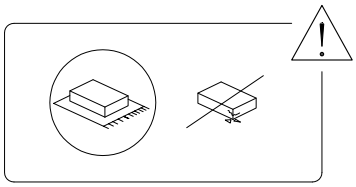



1

1/8

A

A	B
	
x 1	x 4

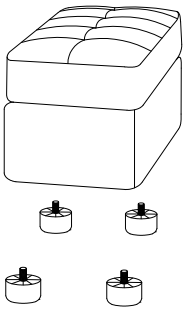

A

C x 4

C

x 4

2/8

!

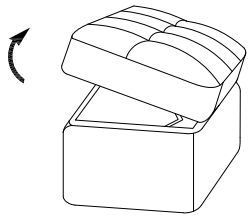

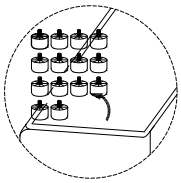

1

A	C	B
		
x 1	x 4	x 4

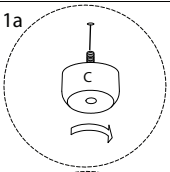

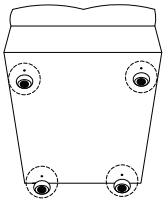

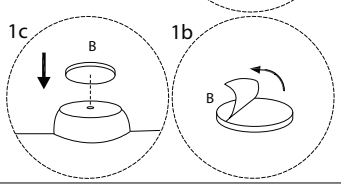

3/8

B

A	B
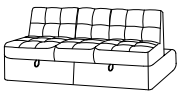	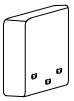
x 1	x 1

A

B

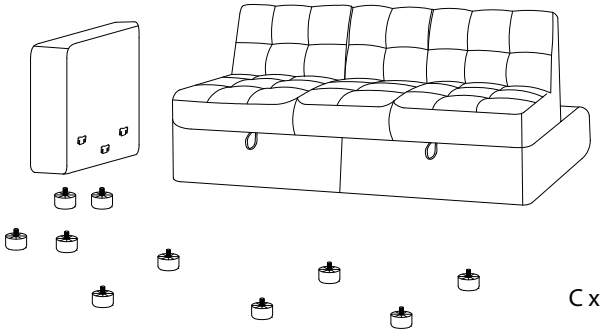

C x 10

C	E
	
x 10	x 10

4/8

1

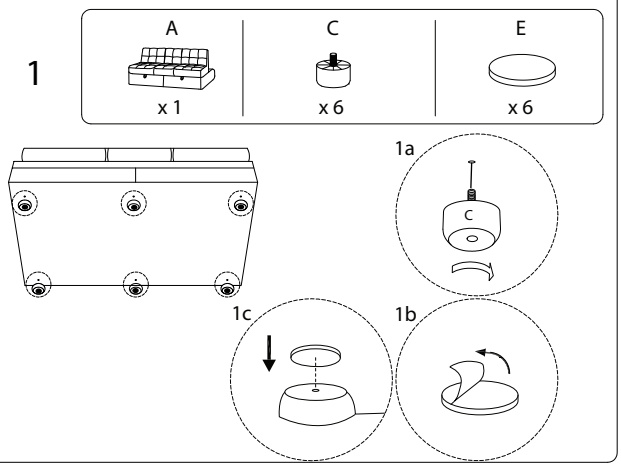

2.

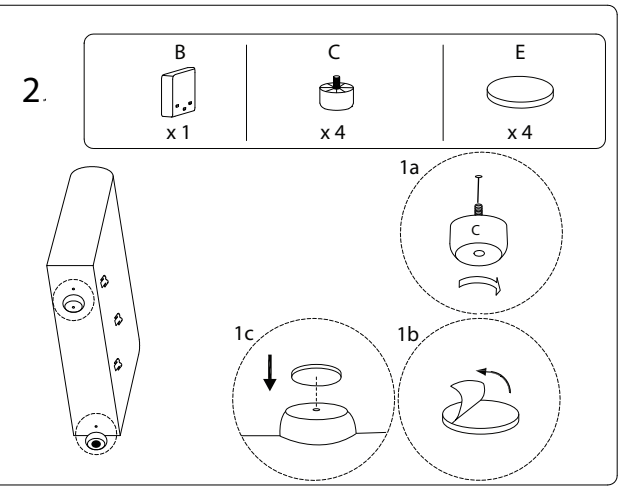

3

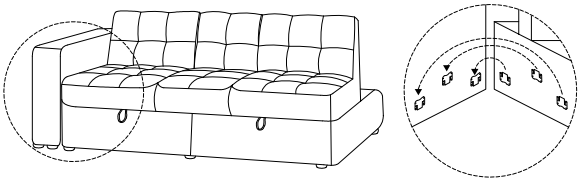

!

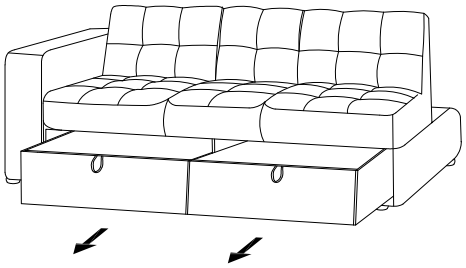

!

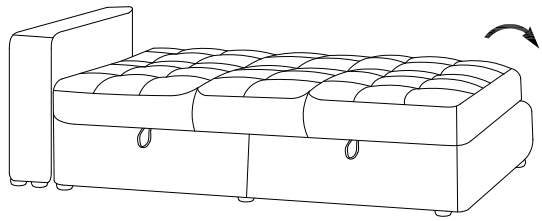

!

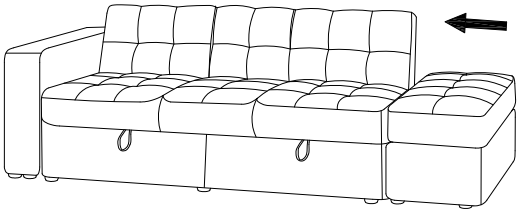

!

