BOURKE

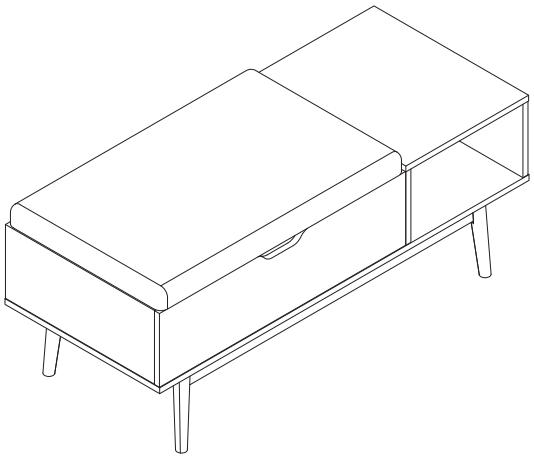

1/16

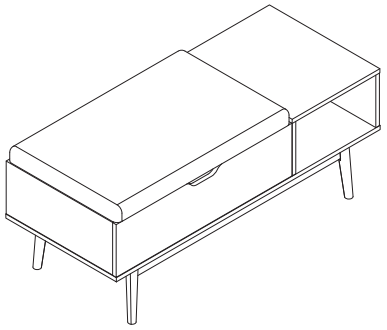

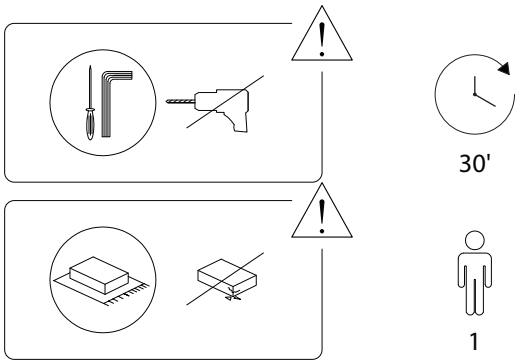

2/16

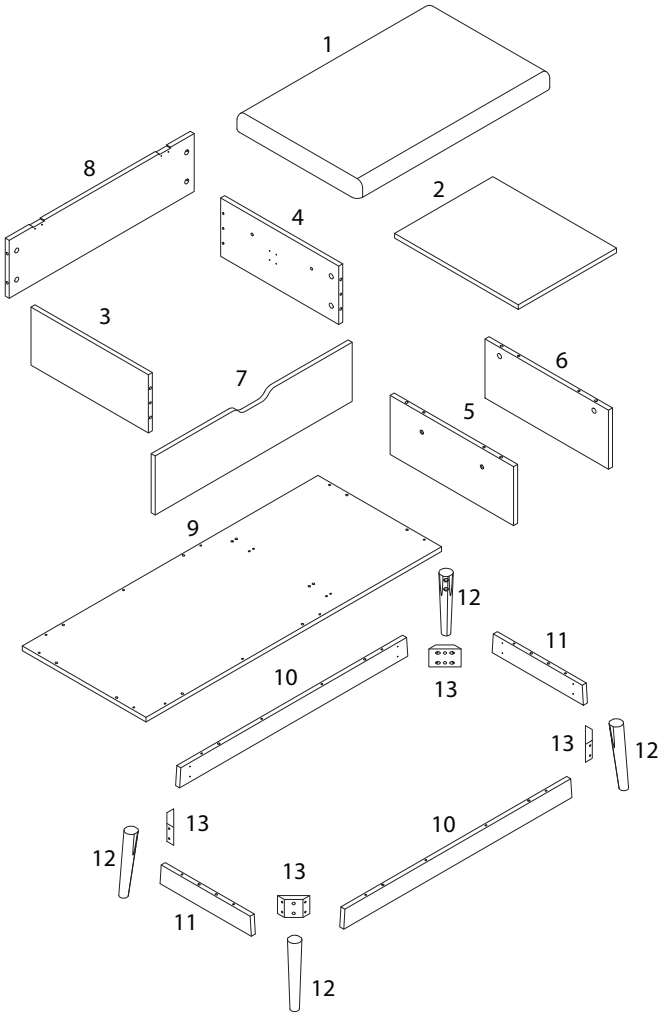

3/16

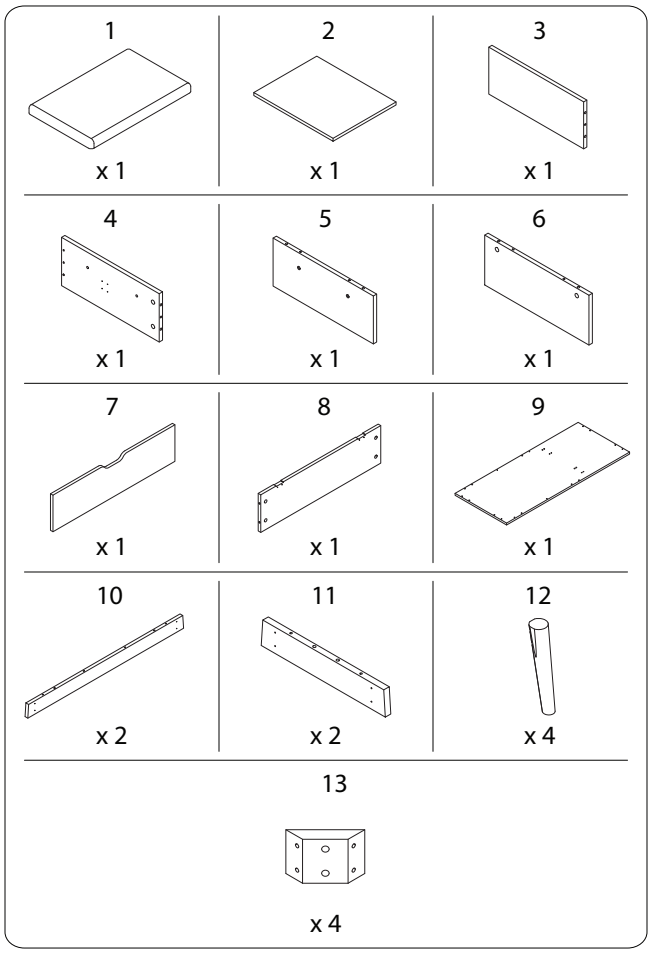

4/16

A	B	C
		
x 12	x 12	x 14
D	**E**	**F**
		
x 28	x 14	x 2
G	**H**	**I**
		
x 16	x 12	x 2
J	**K**	**L**
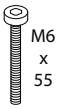		
x 8	x 1	x 4
M	**N**	
		
x 12	x 1	

1

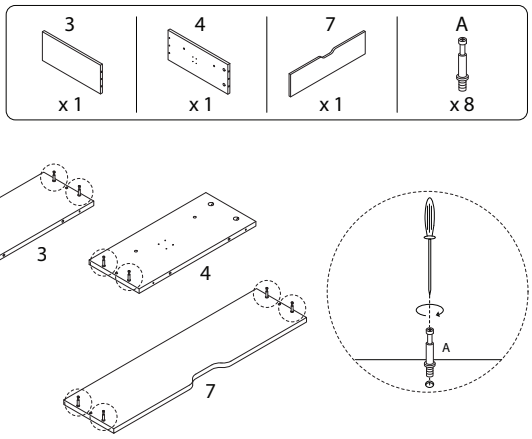

2

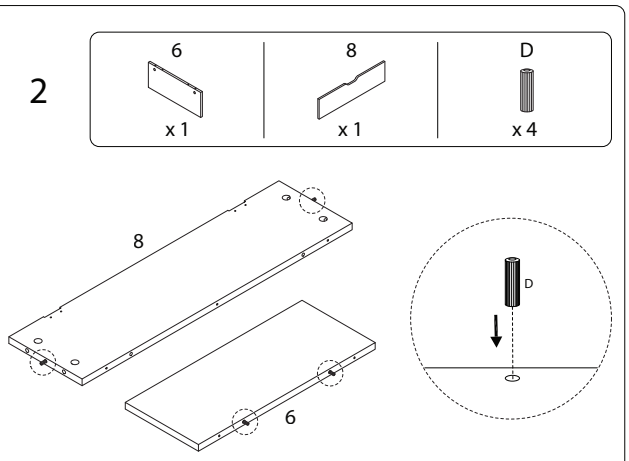

3

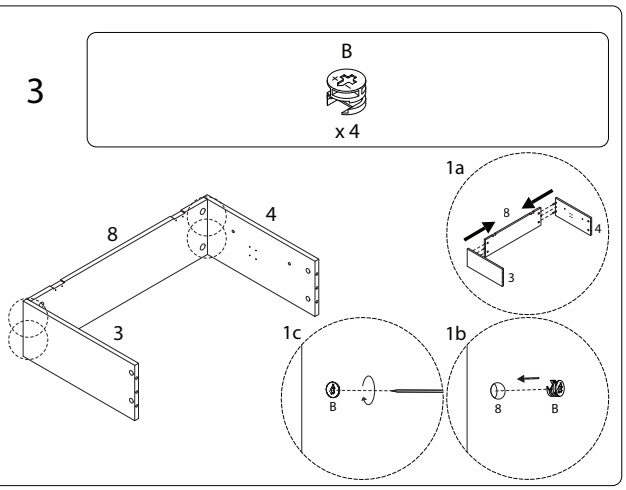

5

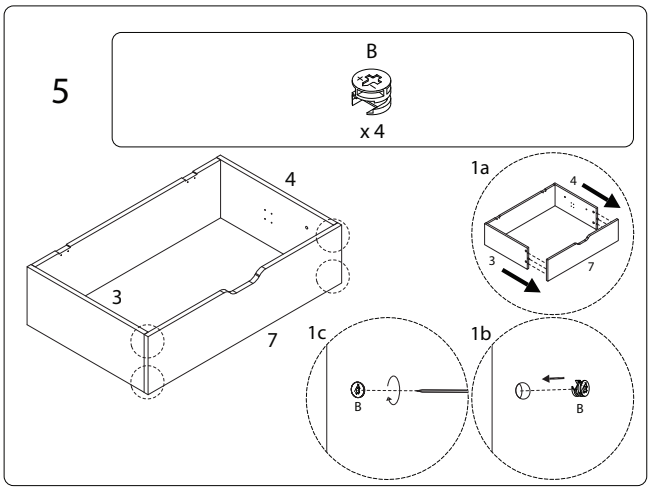

4

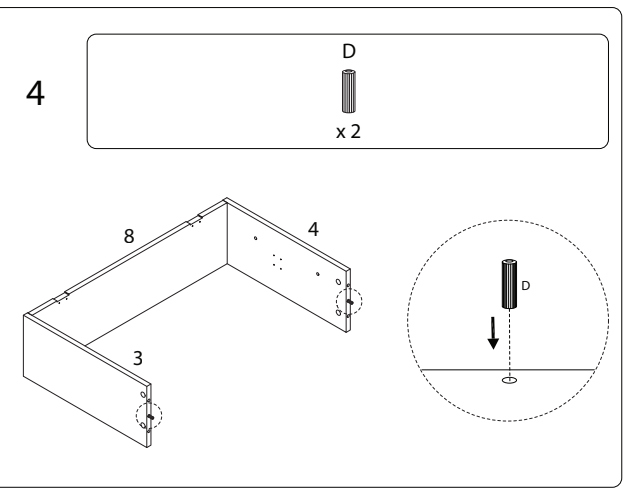

6

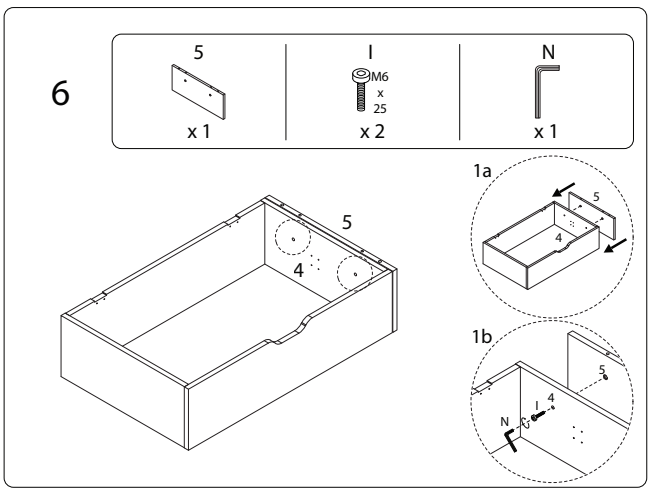

7

D

x 10

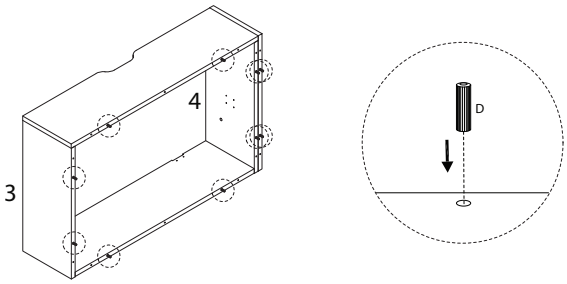

8

9

x 1

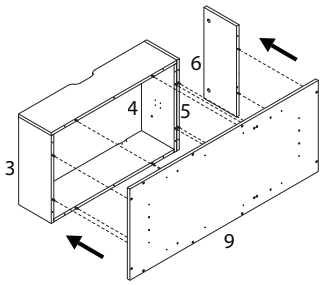

9

C

M4 x 40

x 14

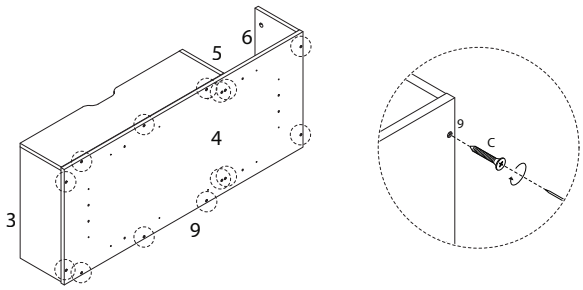

10

10

x 2

11

x 2

13

x 4

G

M4 x 25

x 16

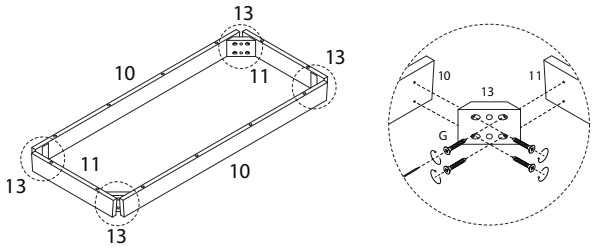

11

D

x 8

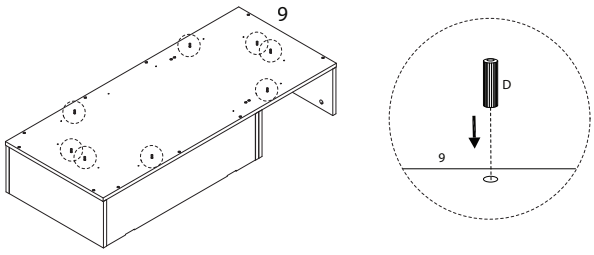

12

H

M4 x 35

x 12

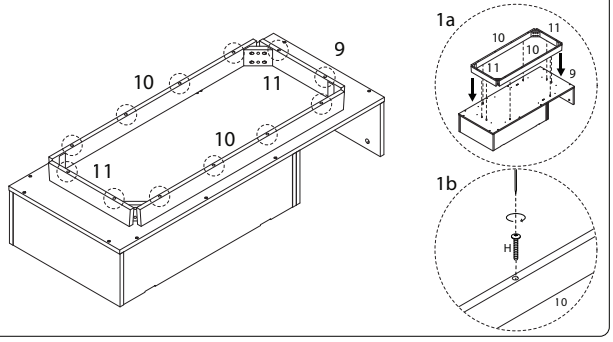

13

12

x 4

J

M6 x 55

x 8

N

x 1

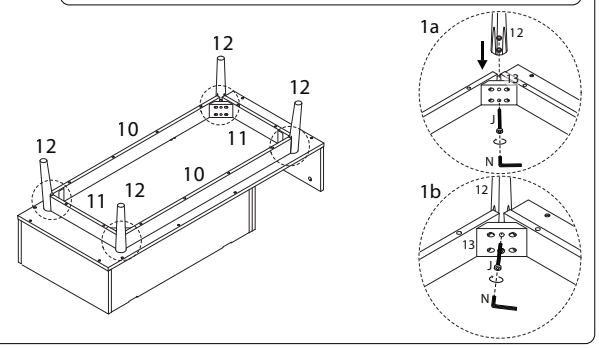

14

L

x 4

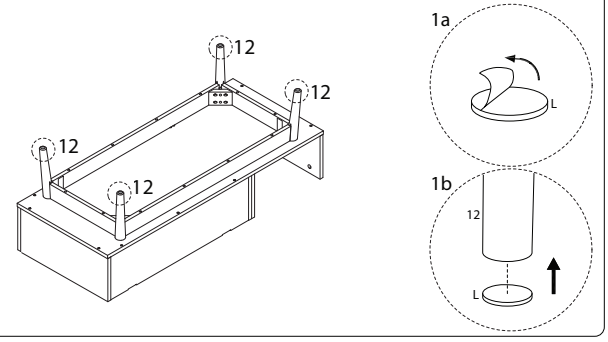

15

D

x 4

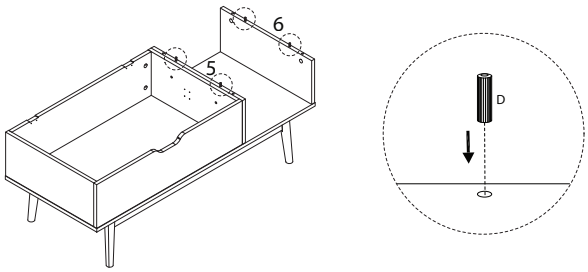

16

2

x 1

A

x 4

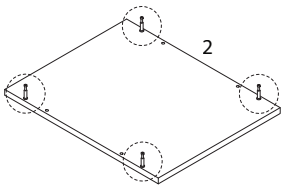

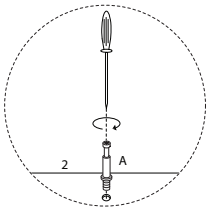

17

B

x 4

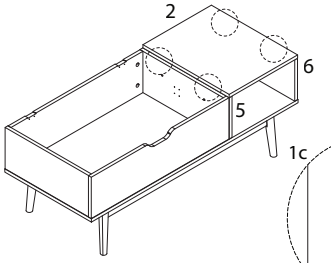

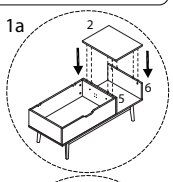

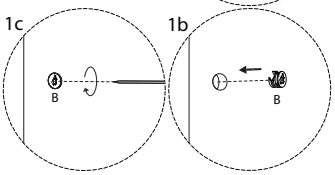

18

M

x 12

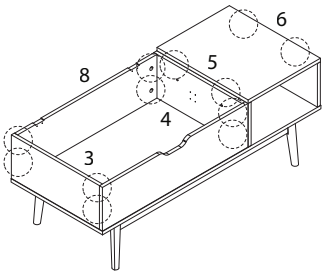

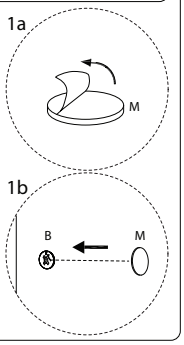

19

1

x 1

E

M3 x 12

x 4

F

x 2

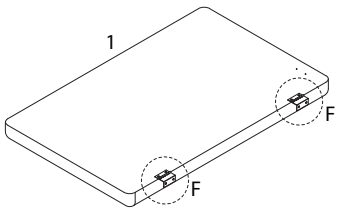

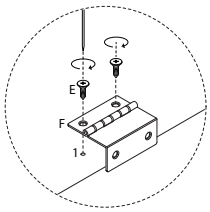

20

E

M3 x 12

x 4

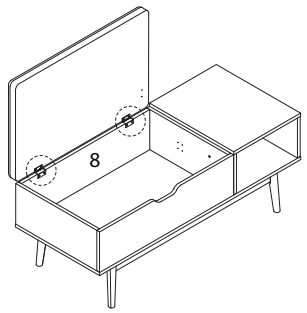

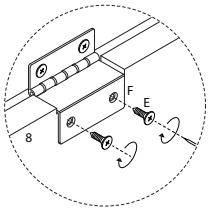

21

E

M3 x 12

x 6

K

x 1

