JULE

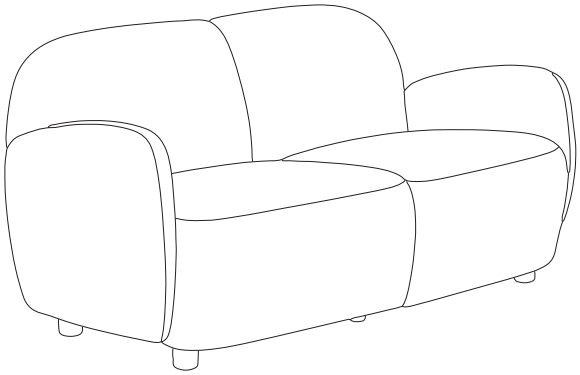

1/5

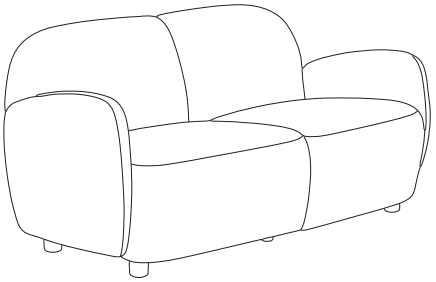

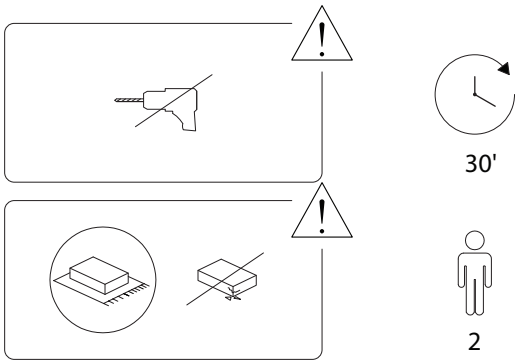

2/5

2970/JULE/160926/

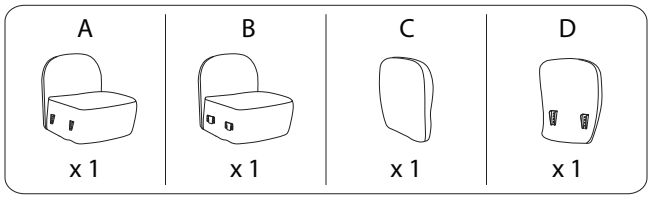

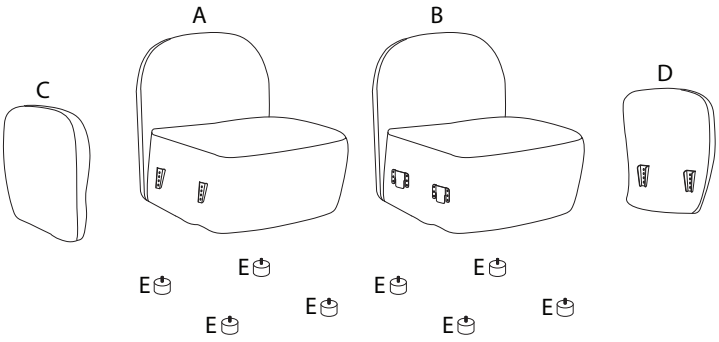

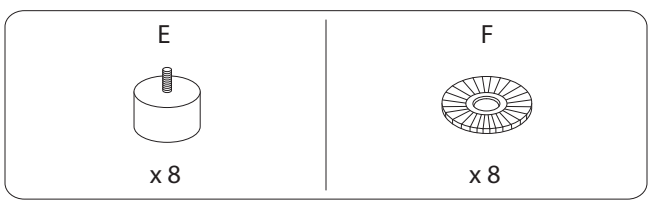

3/5

2970/JULE/160926/

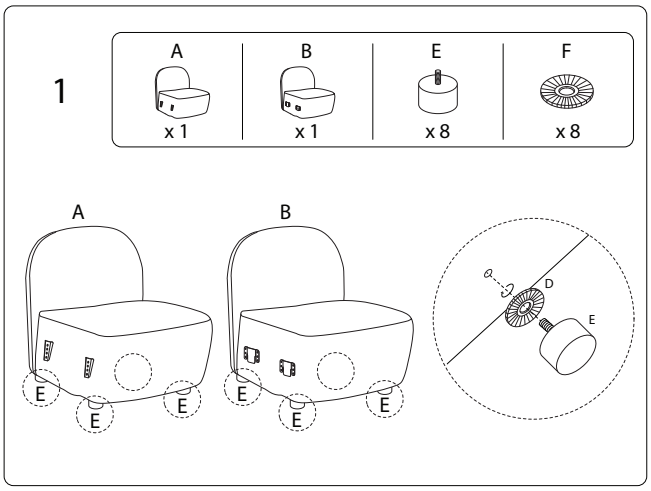

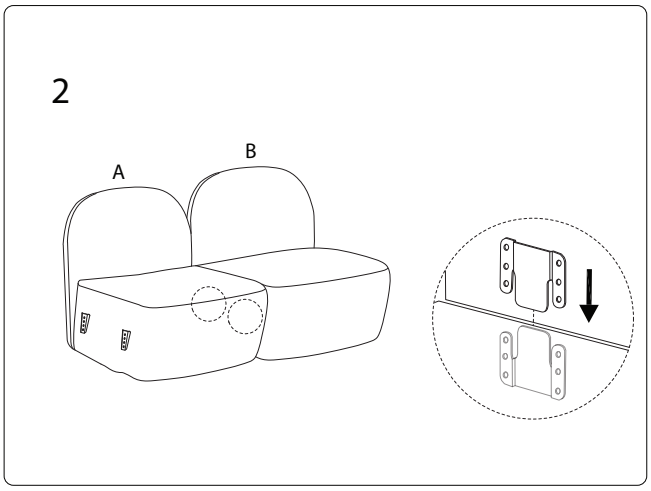

4/5

2970/JULE/160926/

3

C	D
	
x 1	x 1

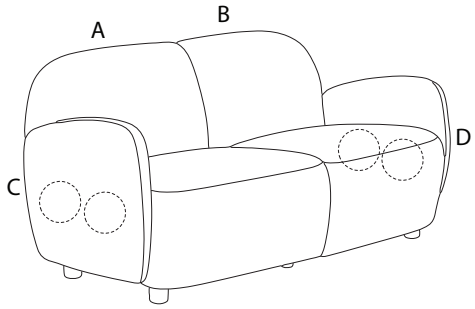

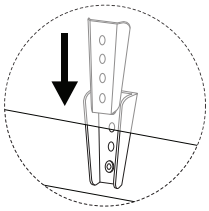

2970/JULE/160926/