DESTIN

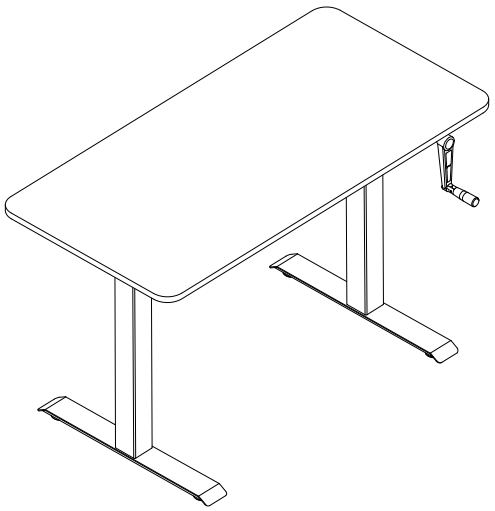

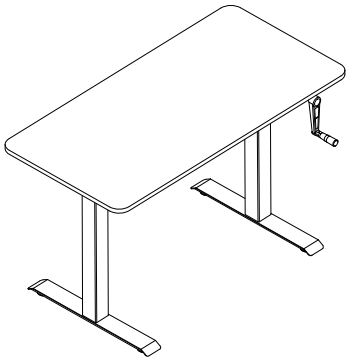

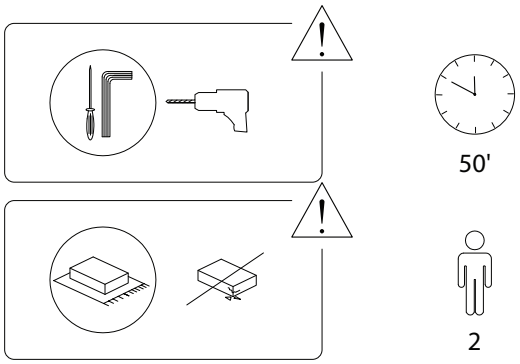

1/10

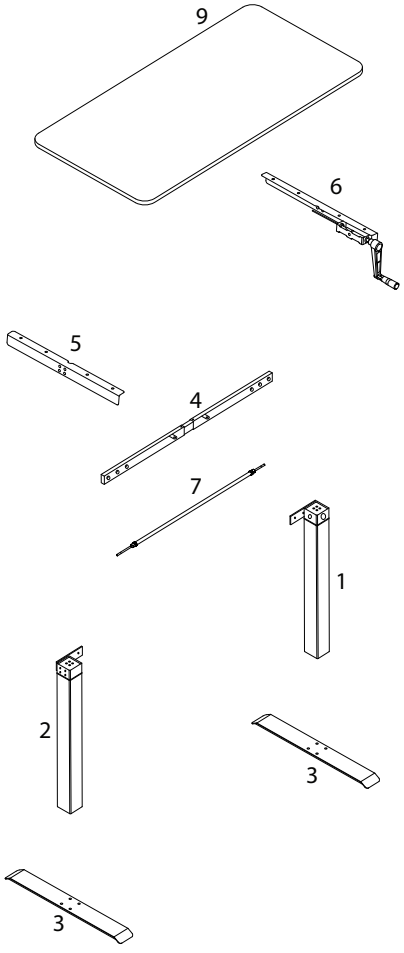

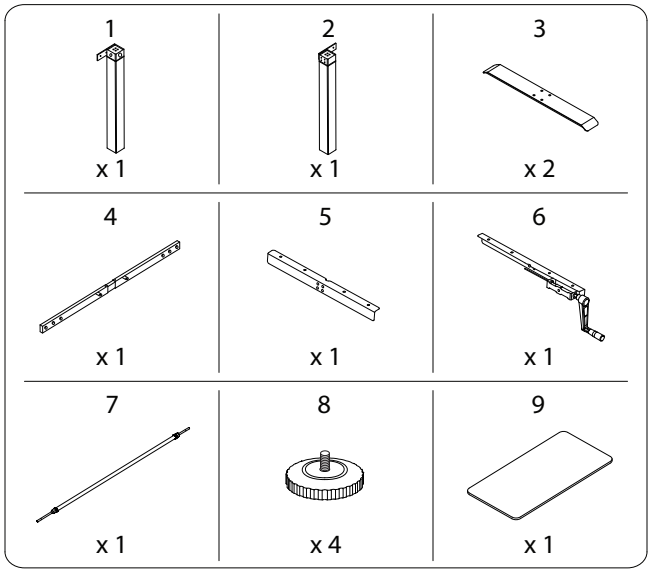

2/10

3/10

A	B	C
M6 x 8	M6 x 16	M5 x 18
x 8	x 8	x 10
D	**E**	**F**
M8 x 10	M6 x 8	
x 4	x 6	x 10
G		
x 1		

1

1	2	4	E	G
x 1	x 1	x 1	M6 x 8 x 6	x 1

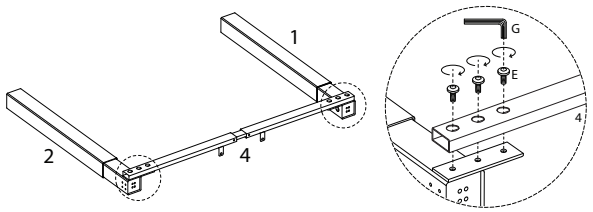

2

3	8	B	G
x 2	x 4	M6 x 16 x 8	x 1

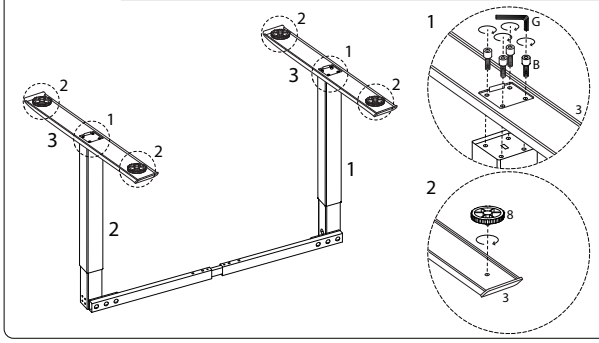

3

6	A	G
x 1	M6 x 8 x 4	x 1

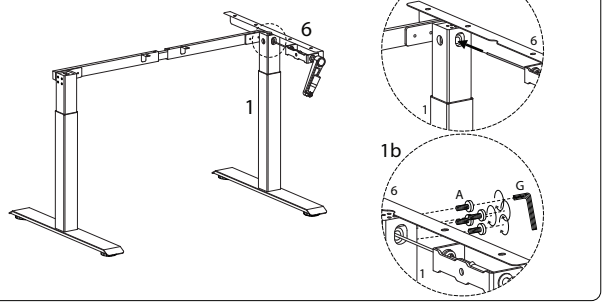

4

5	A	G
x 1	M6 x 8 x 4	x 1

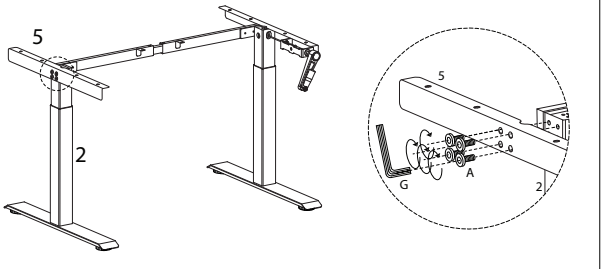

5

7
x 1

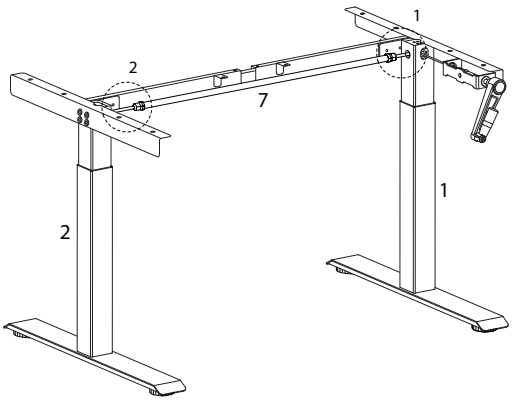

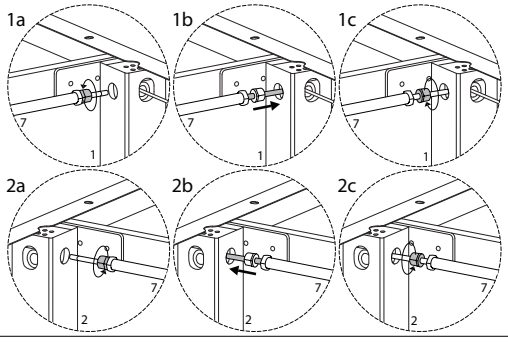

6

F

x 10

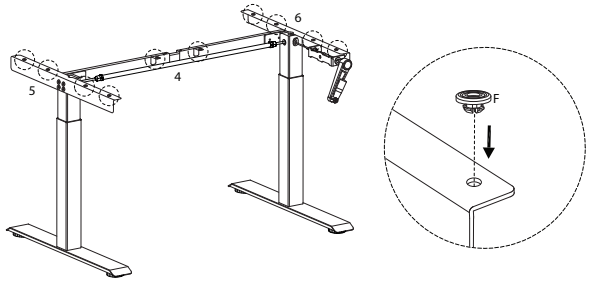

7

9

x 1

C

M5
x
18

x 10

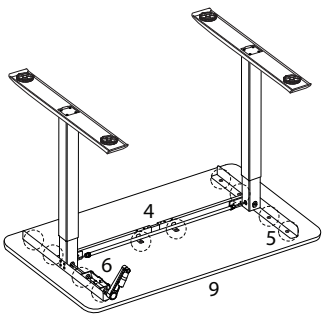

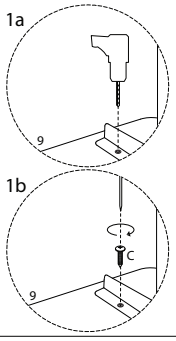

8/10

2109/DESTIN/020224/

8

D

M8
x
10

x 4

G

x 1

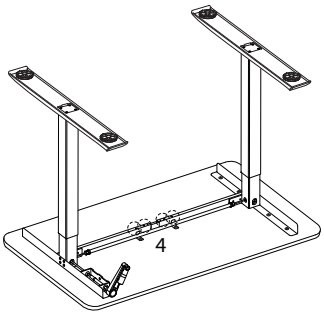

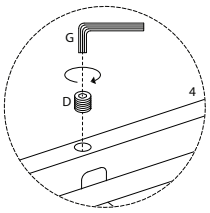

9/10

2109/DESTIN/020224/

!

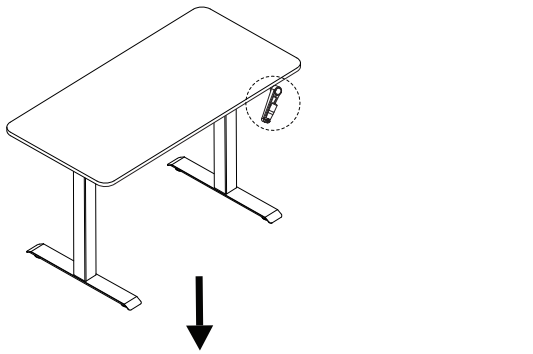

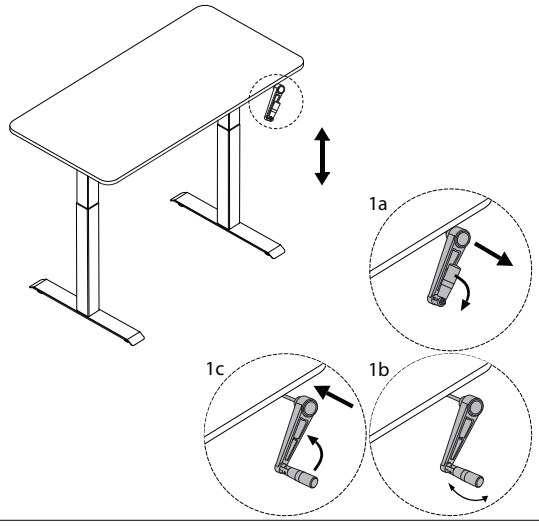

10/10

2109/DESTIN/020224/