GENOA

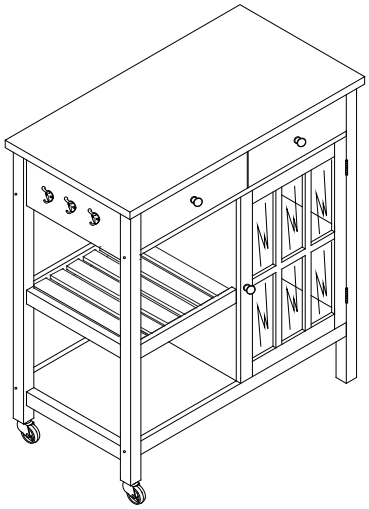

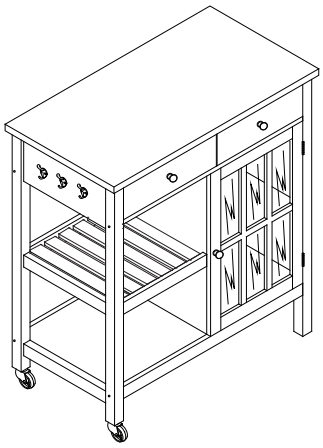

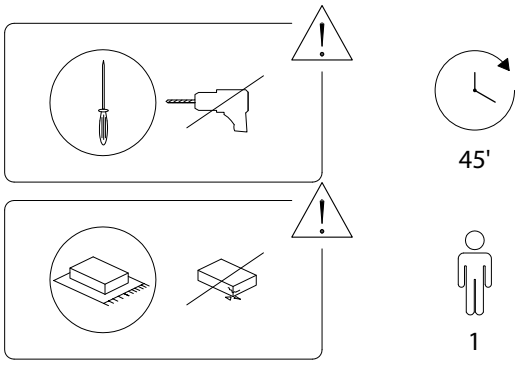

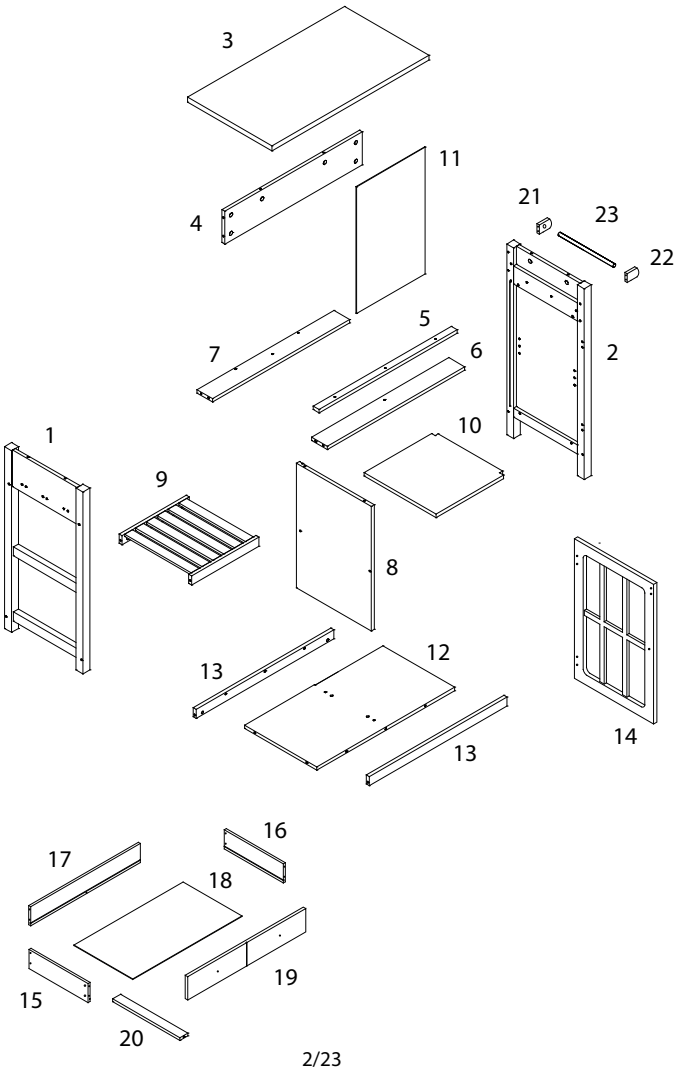

1 x 1	2 x 1	3 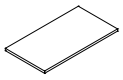 x 1	4 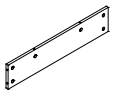 x 1	
5 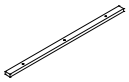 x 1	6 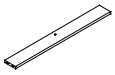 x 1	7 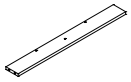 x 1	8 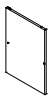 x 1	
9 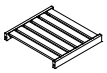 x 1	10 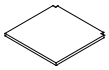 x 1	11 x 1	12 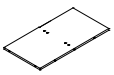 x 1	13 x 2
14 x 1	15 x 1	16 x 1	17 x 1	18 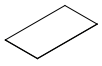 x 1
19 x 1	20 x 1	21 x 1	22 x 1	23 x 1

680/GENOA/260225/

A	B	C	D
x 23	x 23	x 14	M4 x 35 x 6
E	**F**	**G**	**H**
M3 x 12 x 28	x 2	x 2	M4 x 35 x 5
J	**K**	**L**	**M**
x 4	x 1	x 3	M4 x 16 x 3

N	O	P	Q	R
x 3	M4 x 25 x 3	M6 x 60 x 10	x 10	x 2
S	**T**	**U**	**V**	**W**
x 1	M3 x 16 x 6	x 1	x 4	x 2

1 x 2

13	A	C
x 1	x 2	x 1

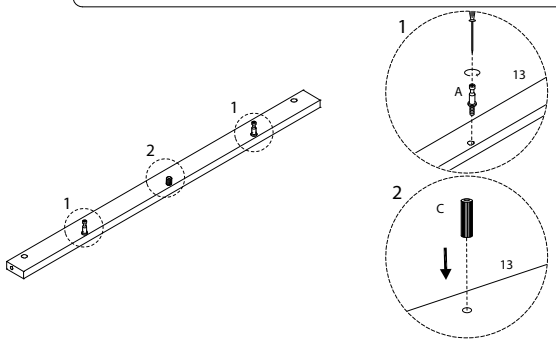

2

12	B
x 1	x 4

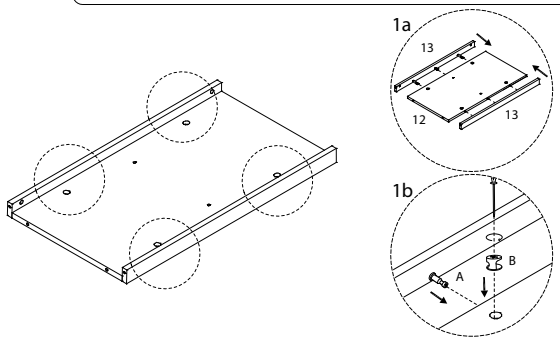

3

8	A	C
x 1	x 2	x 2

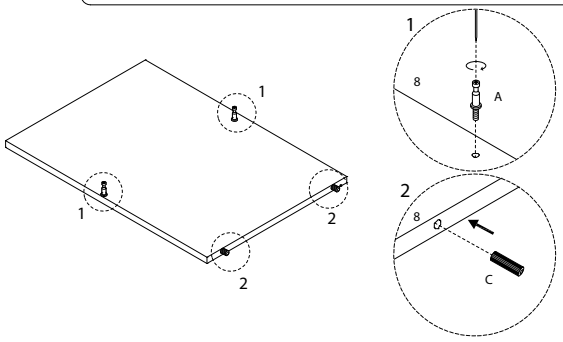

4

D
M4 x 35 x 2

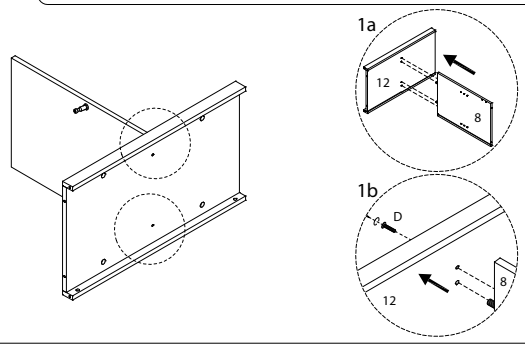

5

9	B
x 1	x 2

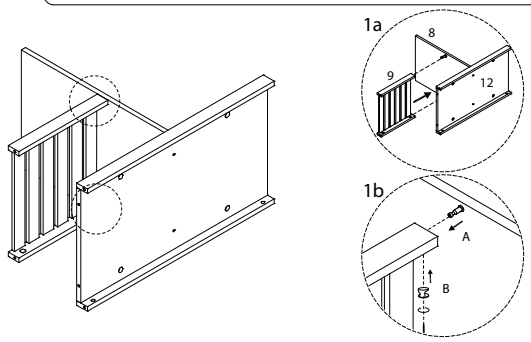

6

4	7	D
x 1	x 1	M4 x 35 x 2

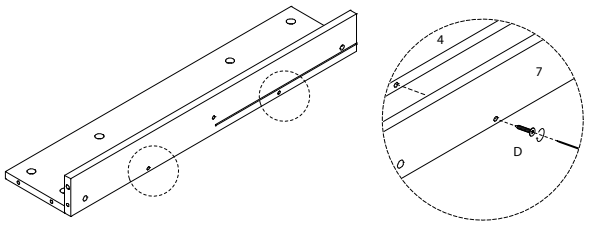

7

D
M4 x 35
x 1

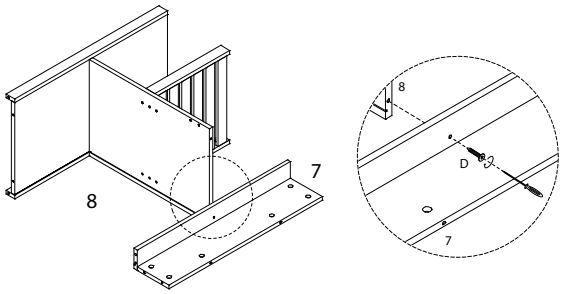

8

6	D
x 1	M4 x 35 x 1

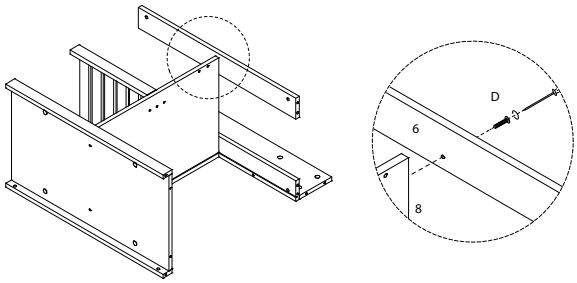

9

2	C
x 1	x 2

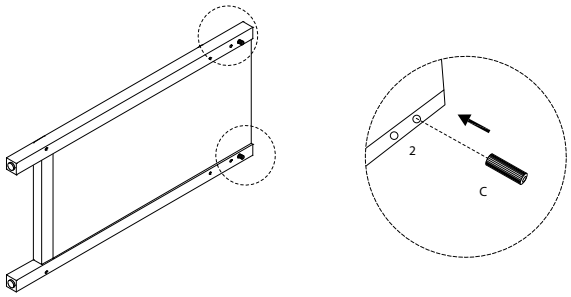

10

21	22	23	P	Q
x 1	x 1	x 1	M6 x 60 x 2	x 2

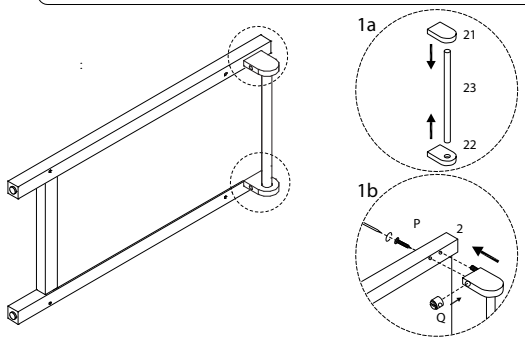

!

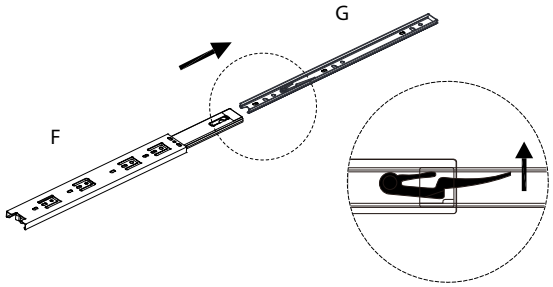

11

1	E	F
x 1	M3 x 12 x 3	x 1

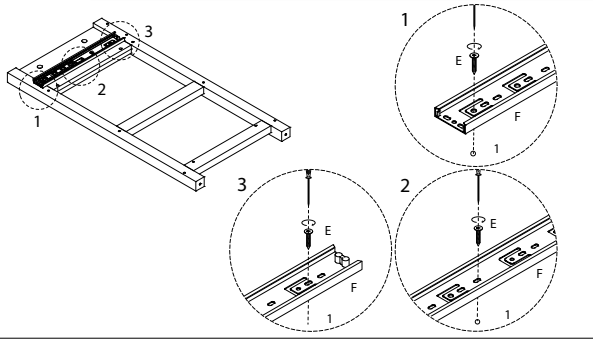

12

E	F
M3 x 12 x 3	x 1

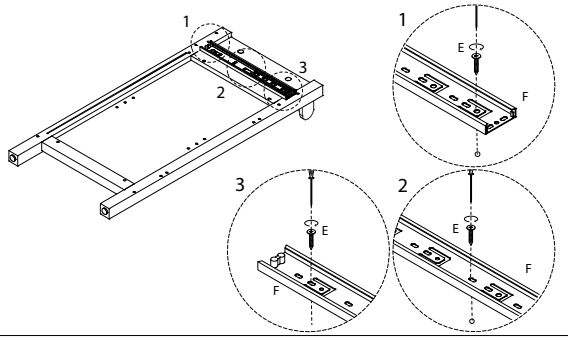

13

A	C
x 4	x 4

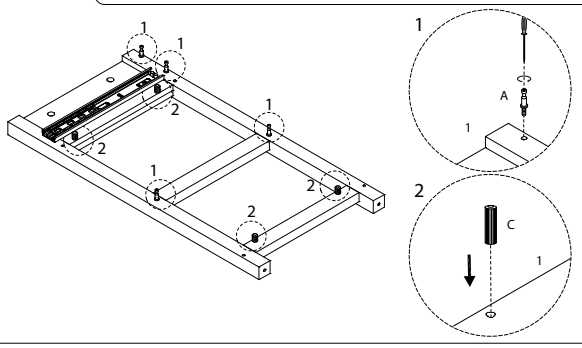

14

A	C
x 2	x 4

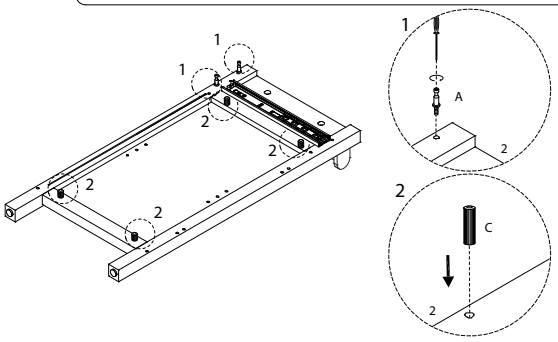

15

11
x 1

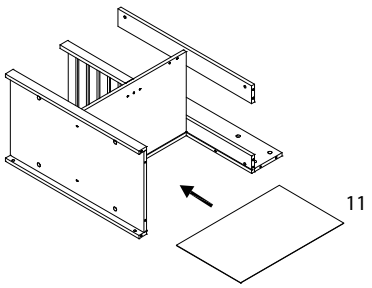

16

B	P	Q
x 2	M6 x 60 x 4	x 4

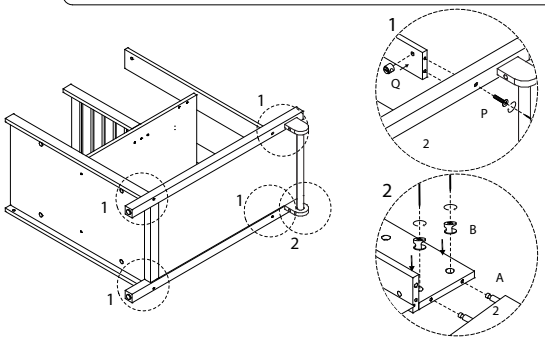

17

B	P	Q
x 4	M6 x 60 x 4	x 4

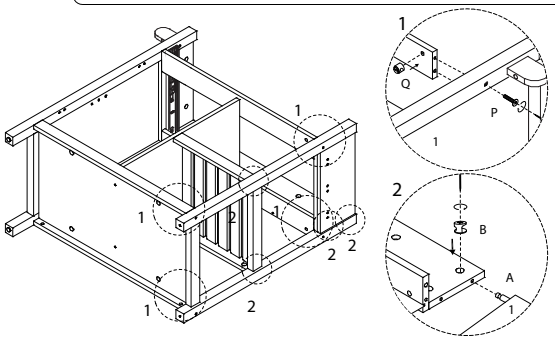

18

K	W
x 1	x 2

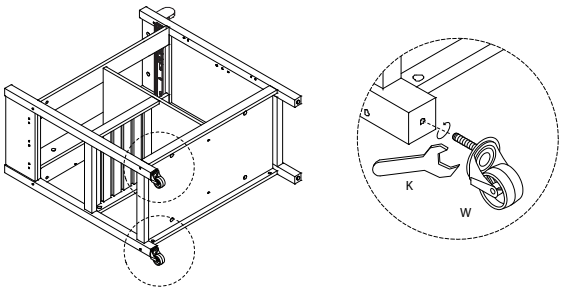

19

E	N	S	T
M3 x 12 x 6	x 3	x 1	M3 x 16 x 2

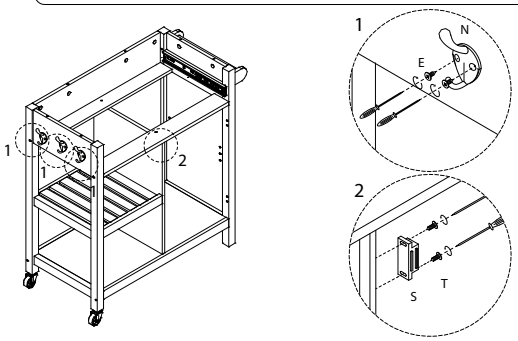

20

3	5	A	O
x 1	x 1	x 6	M4 x 25 x 3

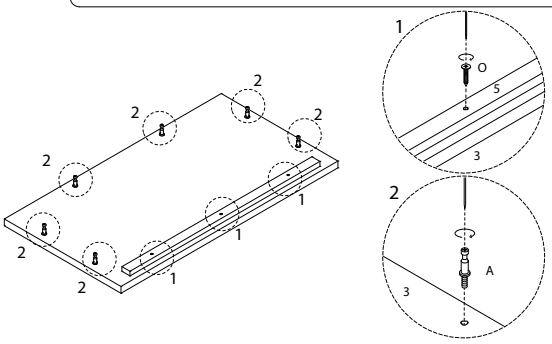

21

B
x 6

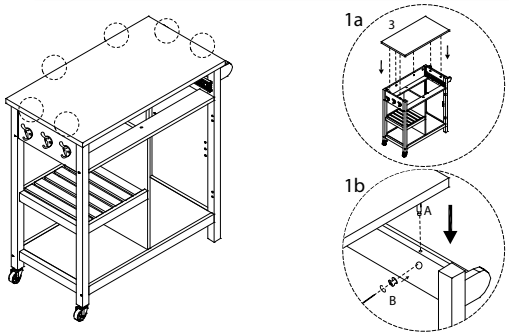

22

14	E	R	U
x 1	M3 x 12 x 6	x 2	x 1

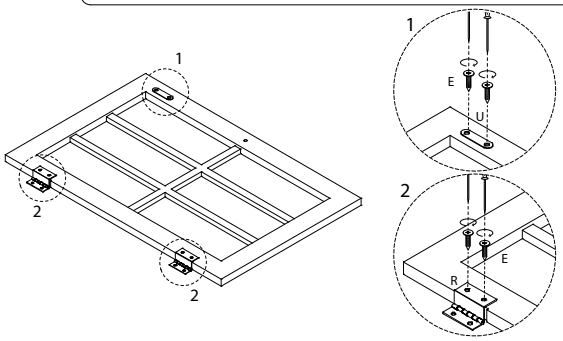

23

E
M3 x 12 x 4

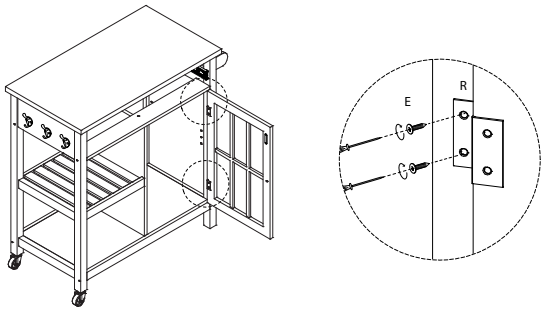

!

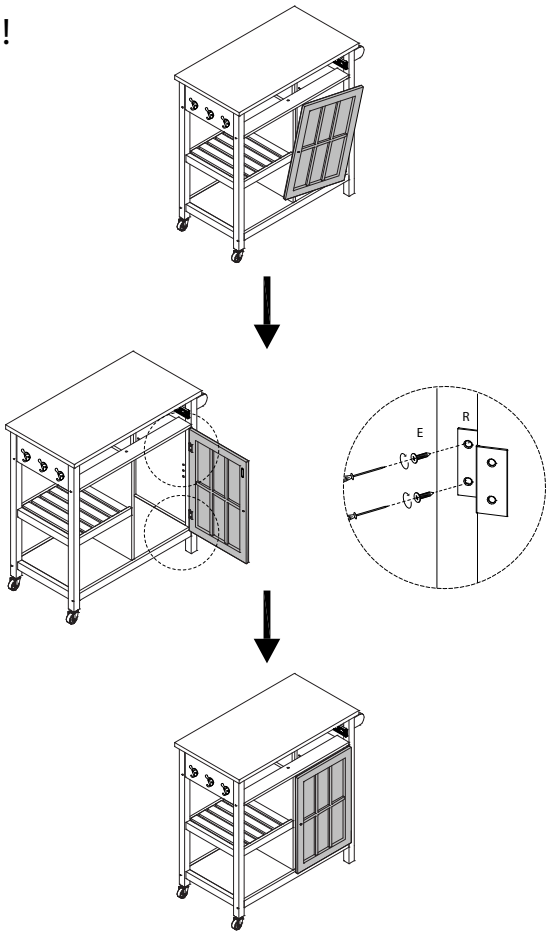

24

L	M
x 1	M4 x 16 x 1

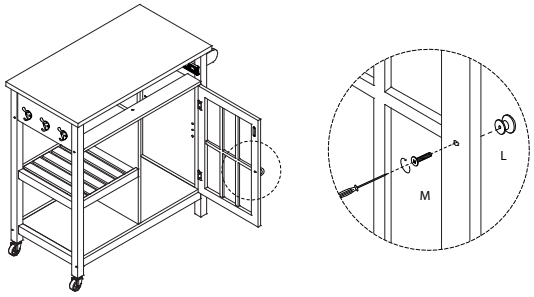

26

10
x 1

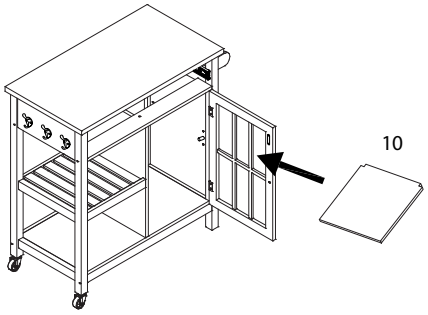

25

V
x 4

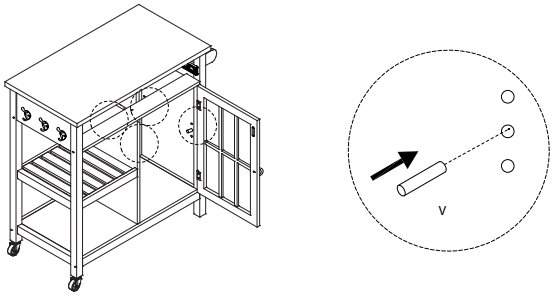

27

19	A
x 1	x 5

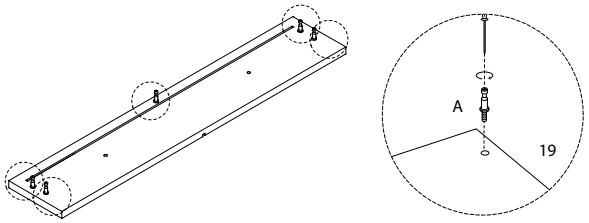

28

15	16	20	B
x 1	x 1	x 1	x 5

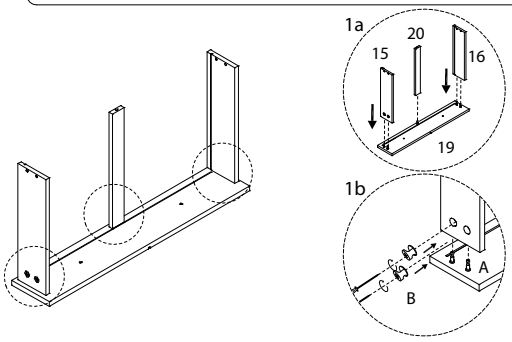

29

18
x 1

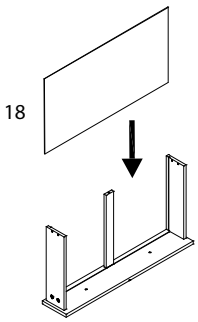

30

17	H
x 1	M4 x 35 x 5

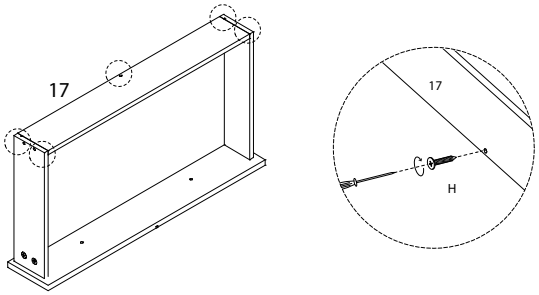

31

E	G
M3 x 12 x 6	x 2

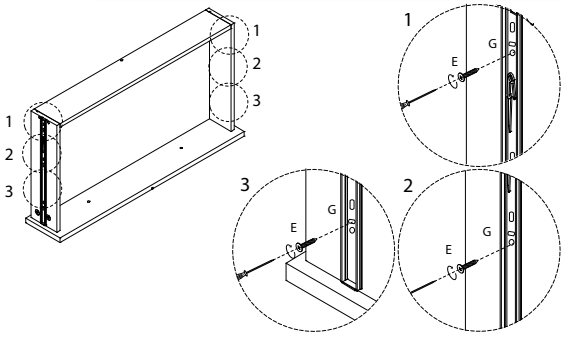

32

L	M
x 2	M4 x 16 x 2

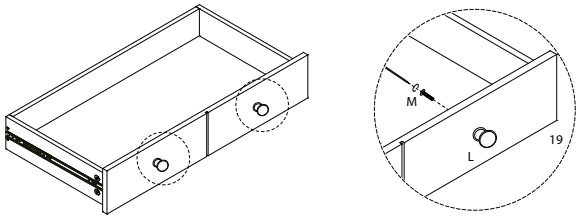

33

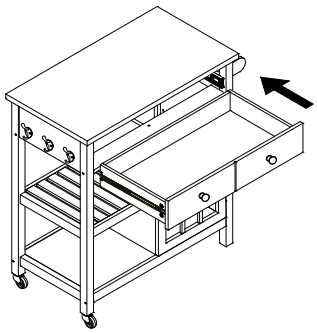

34
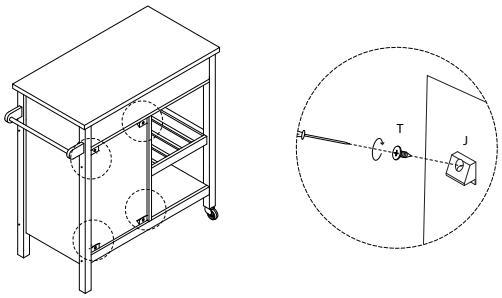
J	T
x 4	M3 x 16 x 4