ORYN

1/11

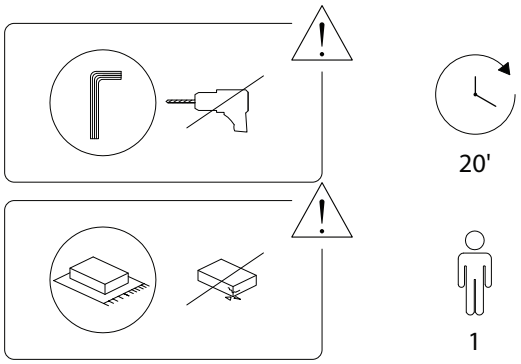

2/11

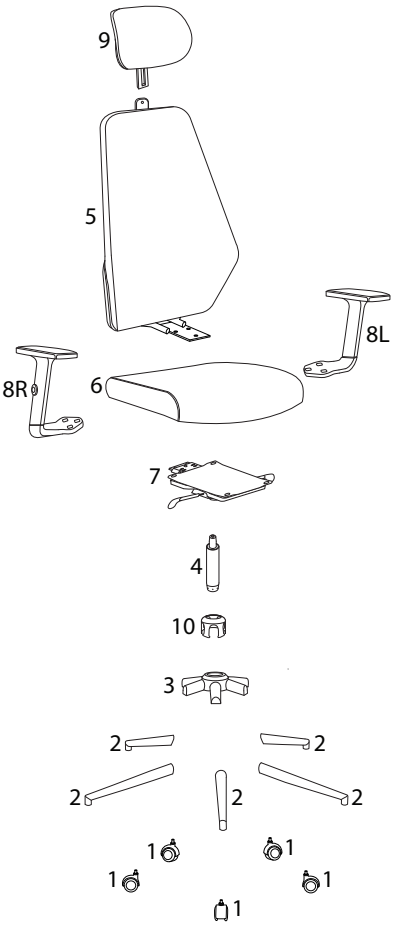

3/11

1 x 5	2 x 5	3 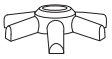 x 1	4 x 1
5 x 1	6 x 1	7 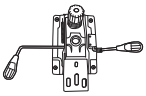 x 1	8R x 1
8L x 1	9 x 1	10 x 1	
A M6 x 22 x 4	B M8 x 25 x 3	C M6 x 32 x 6	
D M6 x 13 x 2	E M6 x 12 x 5	F x 1	

4/11

2463/ORYN/160226/

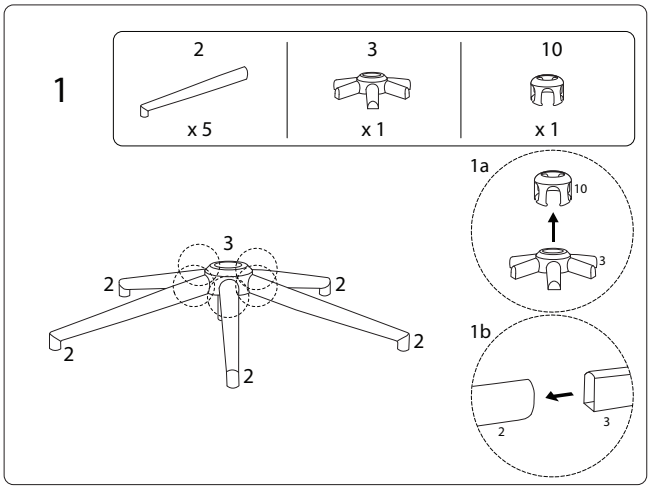
1
2
x 5
3
x 1
10
x 1
1a
1b

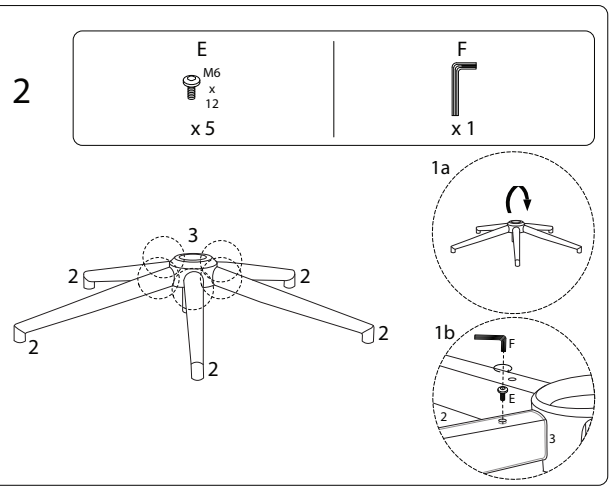
2
E
M6
x
12
x 5
F
x 1
1a
1b

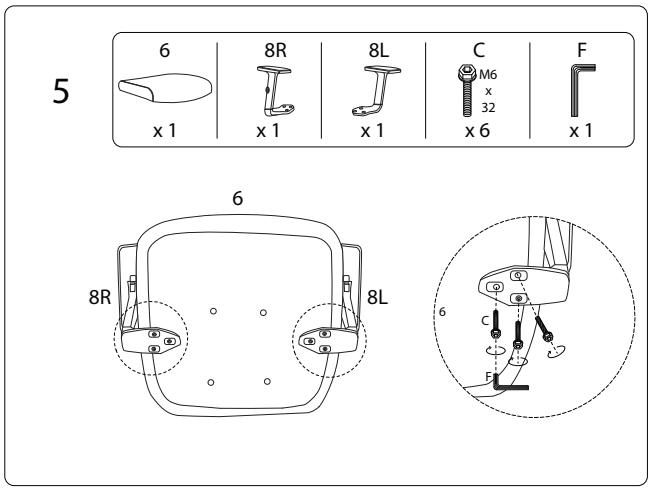
5
6
x 1
8R
x 1
8L
x 1
C
M6
x
32
x 6
F
x 1

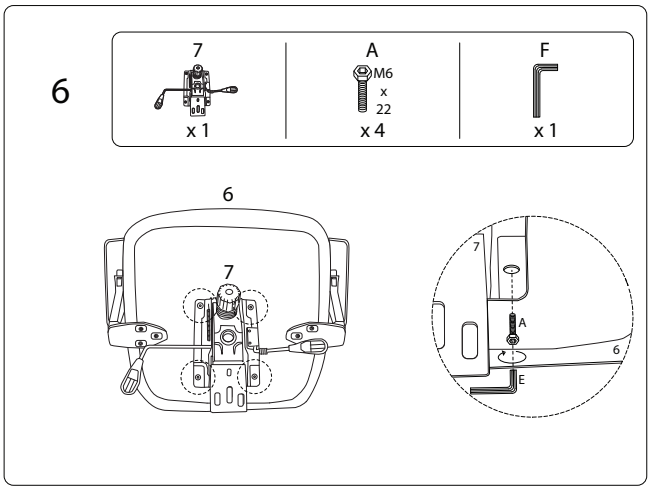
6
7
x 1
A
M6
x
22
x 4
F
x 1

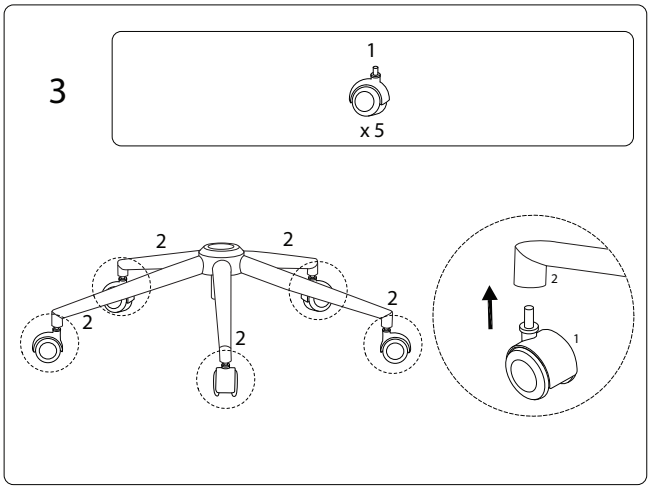
3
1
x 5

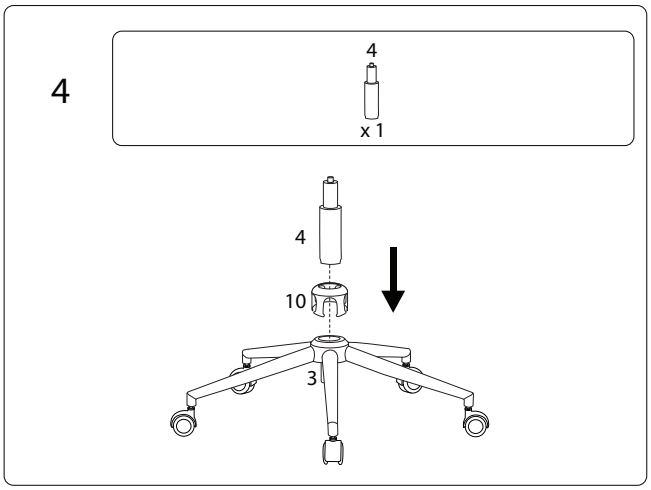
4
x 1

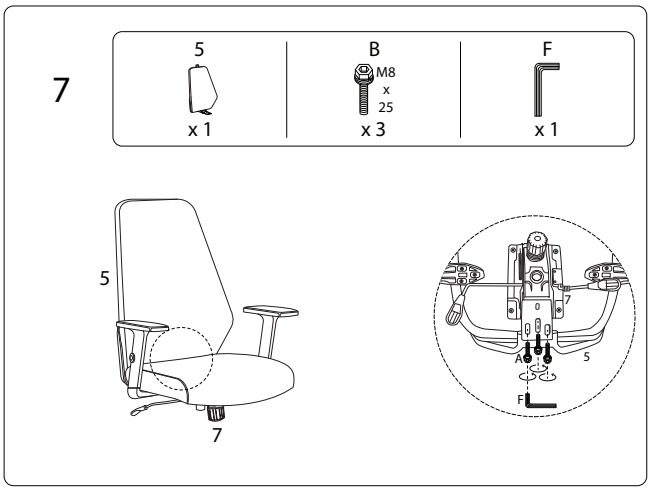
7
5
x 1
B
M8
x
25
x 3
F
x 1

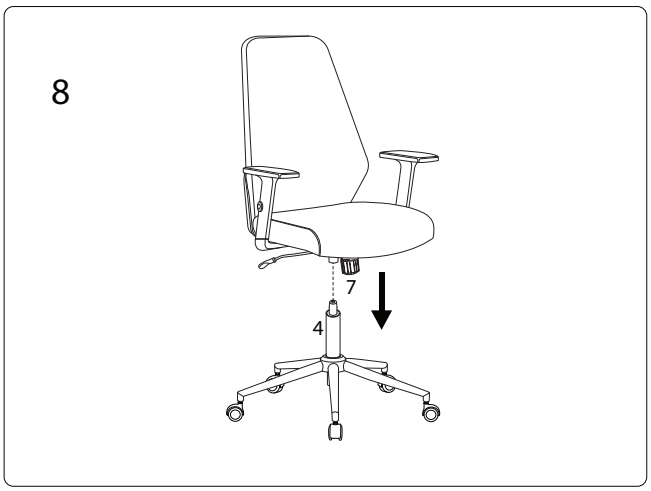
8
7
4

9

9	D	F
x 1	M6 x 13 x 2	x 1

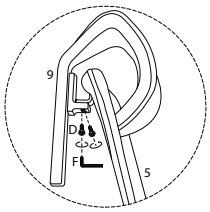

!

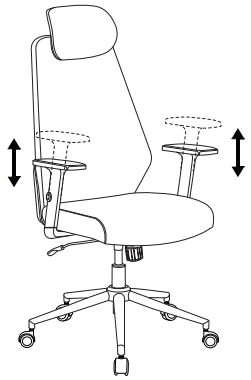

!

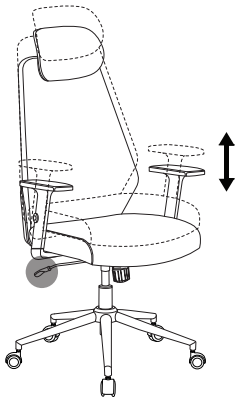

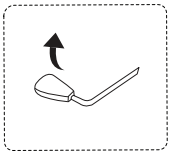

9/11

2463/ORYN/160226/

!

10/11

2463/ORYN/160226/

!

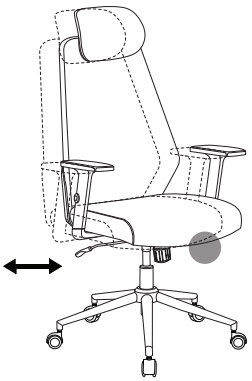

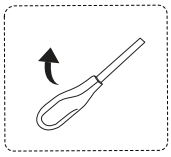

11/11

2463/ORYN/160226/