

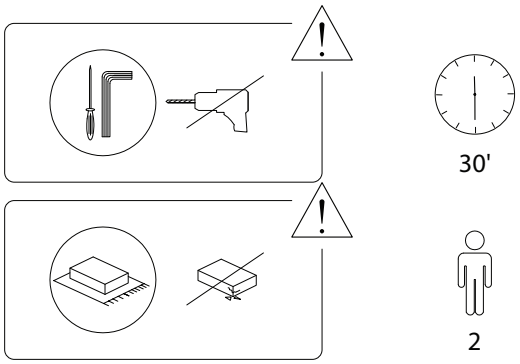

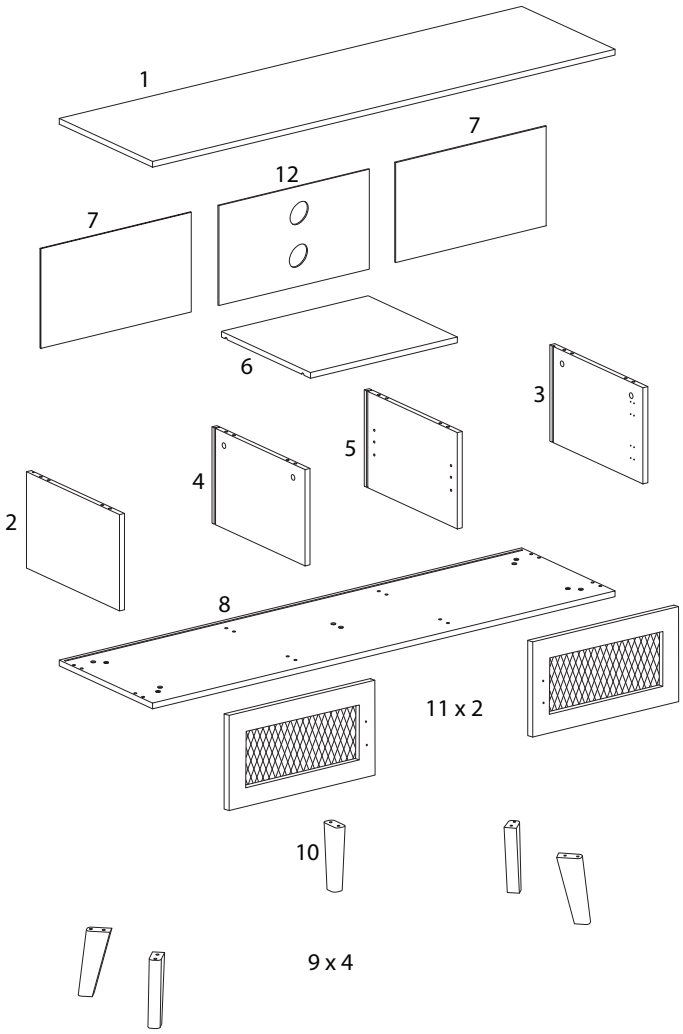

1  x 1	2 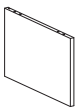 x 1	3 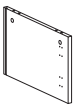 x 1
4 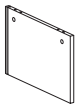 x 1	5 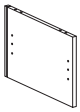 x 1	6 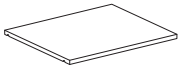 x 1
7 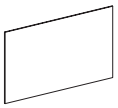 x 2	8 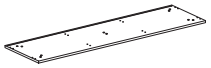 x 1	9  x 4
10  x 1	11 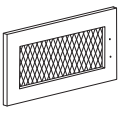 x 2	12 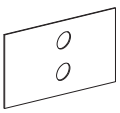 x 1

A  x 8	B  x 8	C  M3.5 x 14 x 28
D  x 2	E  x 2	F 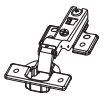 x 4
G  M3 x 14 x 4	H  M6 x 25 x 10	I  x 4
J 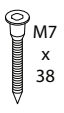 M7 x 38 x 8	K 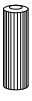 x 16	L  x 1

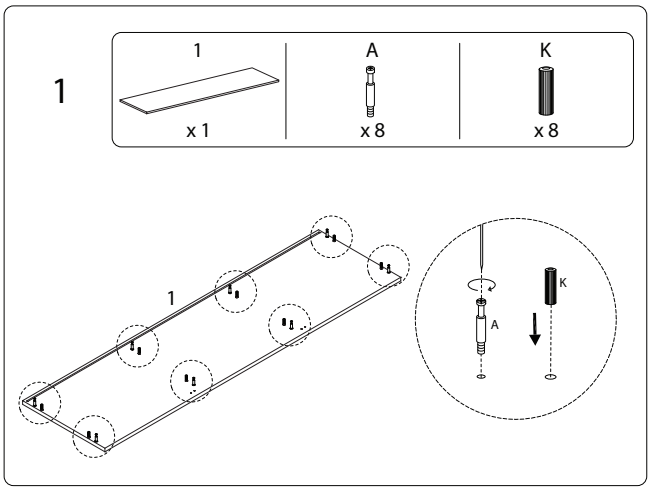
1
1
x 1
A
x 8
K
x 8
1
A
K

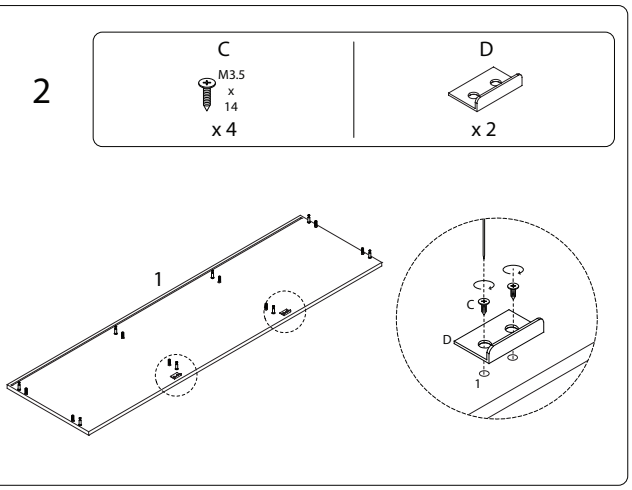
2
C
M3.5
x
14
x 4
D
x 2
1
C
D
1

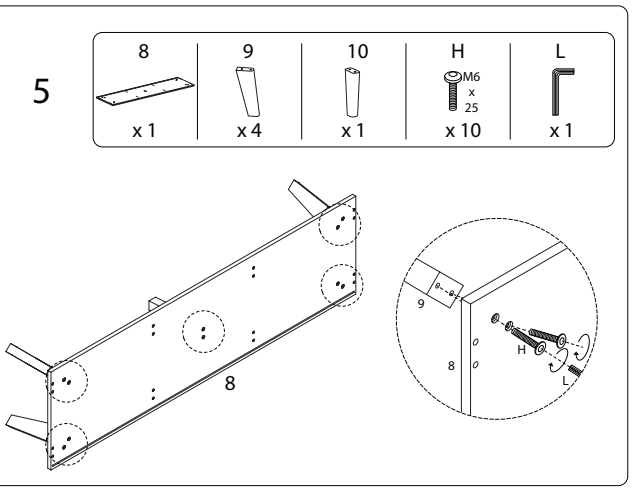
5
8
x 1
9
x 4
10
x 1
H
M6
x
25
x 10
L
x 1
8
9
8
H
L

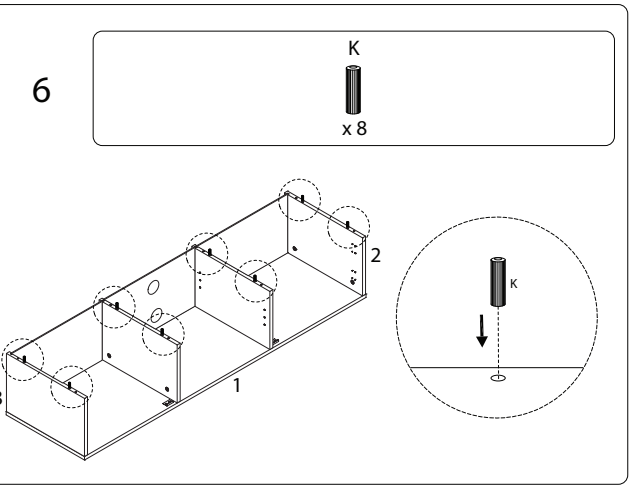
6
K
x 8
2
3
1
K

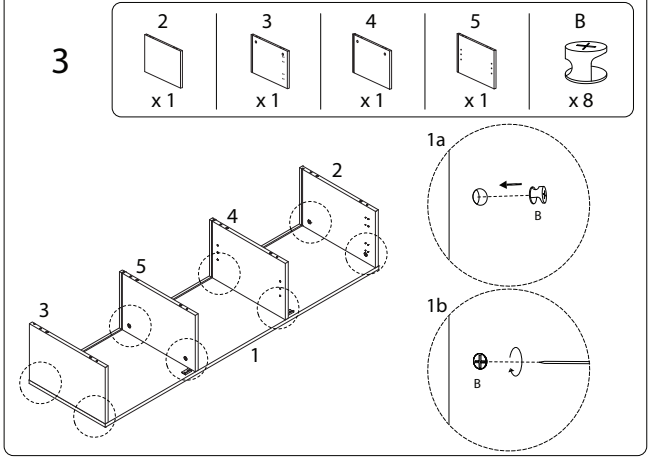
3
2
x 1
3
x 1
4
x 1
5
x 1
B
x 8
1a
B
1b
B
2
4
5
3
1

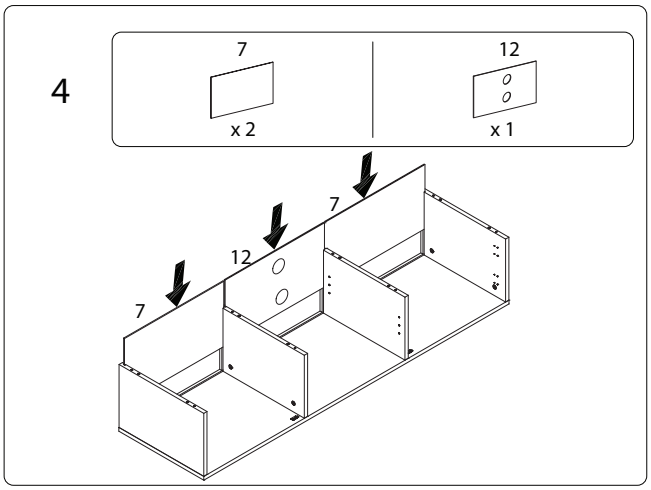
4
7
x 2
12
x 1
7
12
7

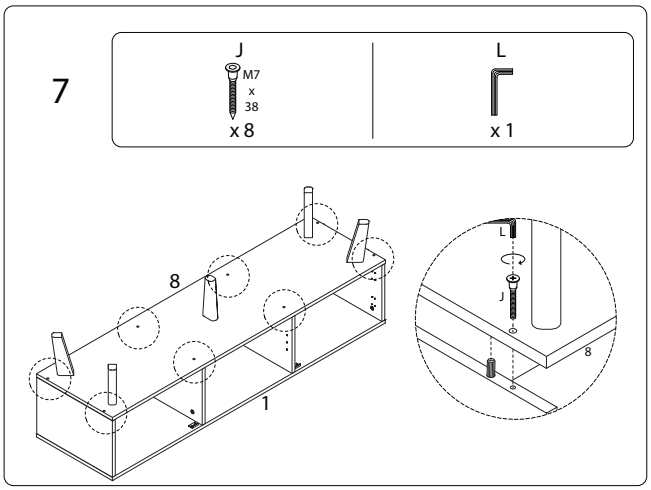
7
J
M7
x
38
x 8
L
x 1
8
1
L
J
8

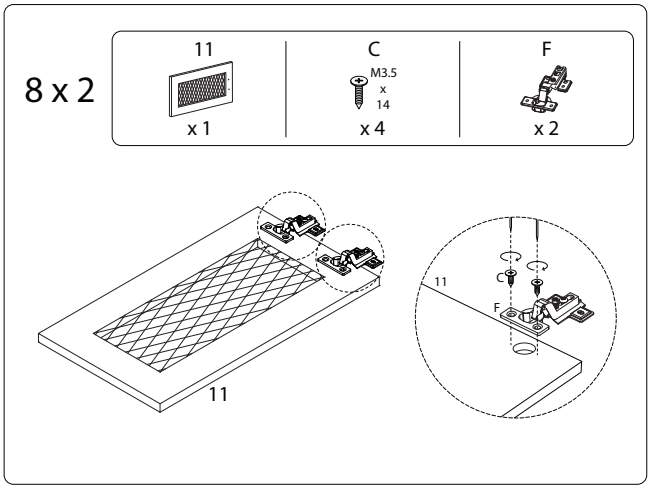
8 x 2
11
x 1
C
M3.5
x
14
x 4
F
x 2
11
11
C
F

9 x 2

E



x 1

G



x 2

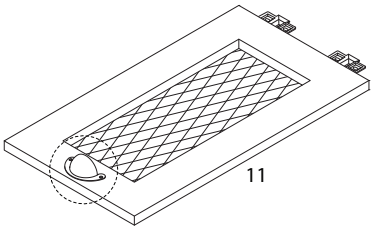

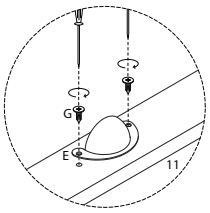

10

C



x 16

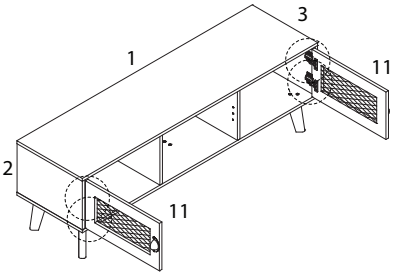

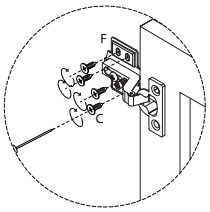

11

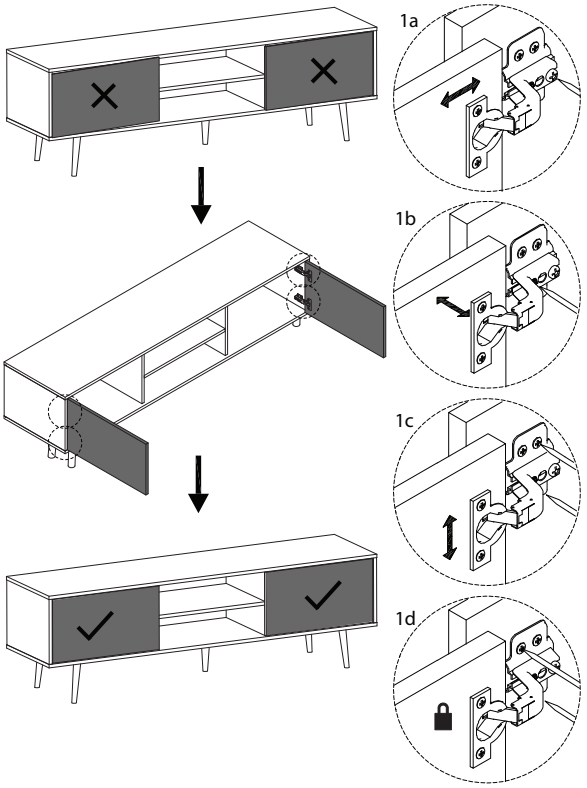

12

I



x 4

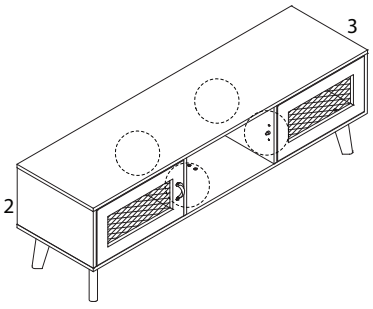

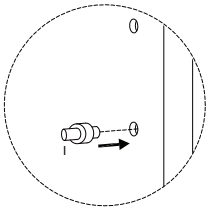

13

6

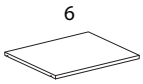

x 1

