BULLOO

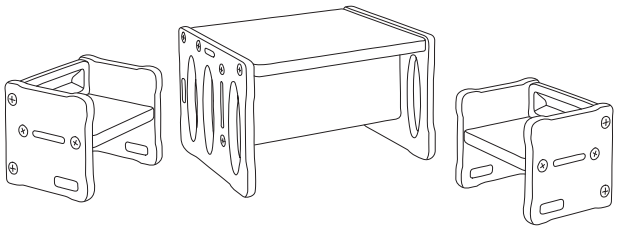

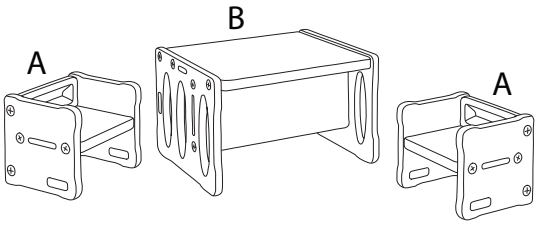
A
B
A

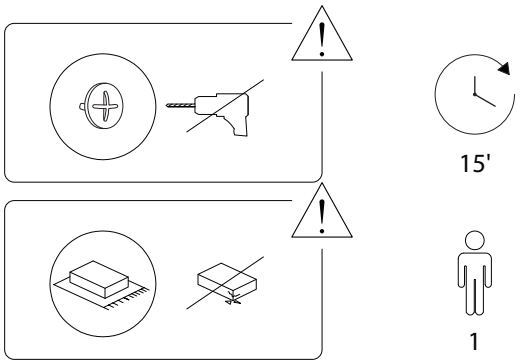
15'
1

A x 2

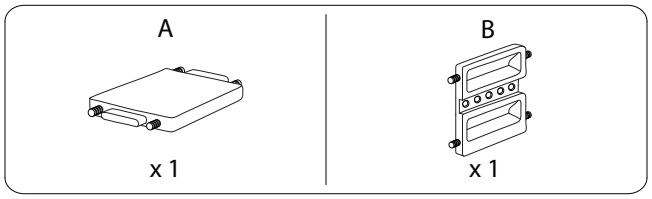
A
x 1
B
x 1

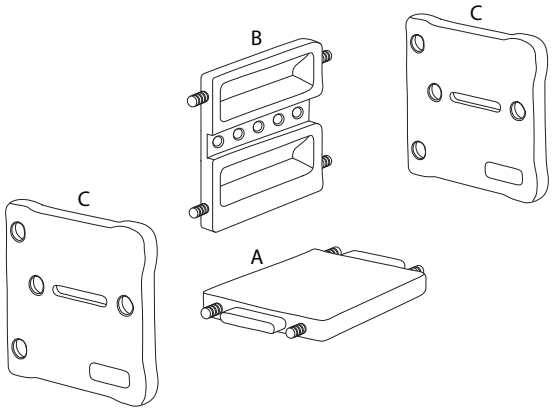
B
C
C
A

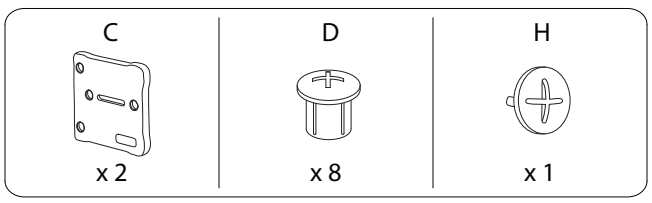
C
x 2
D
x 8
H
x 1

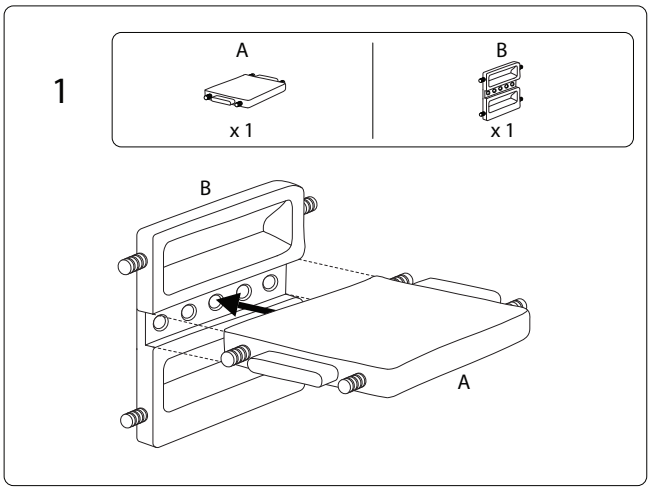
1
A
x 1
B
x 1
B
A

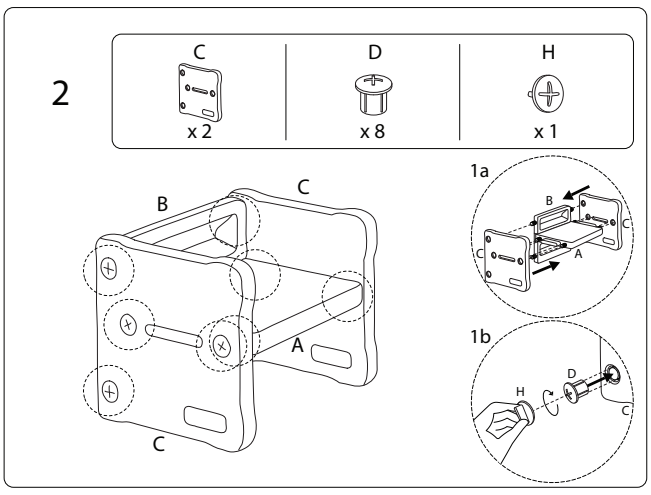
2
C
x 2
D
x 8
H
x 1
B
C
A
C
1a
B
C
A
1b
H
D
C

B

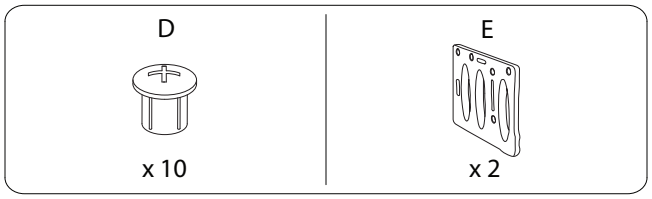
D
x 10
E
x 2

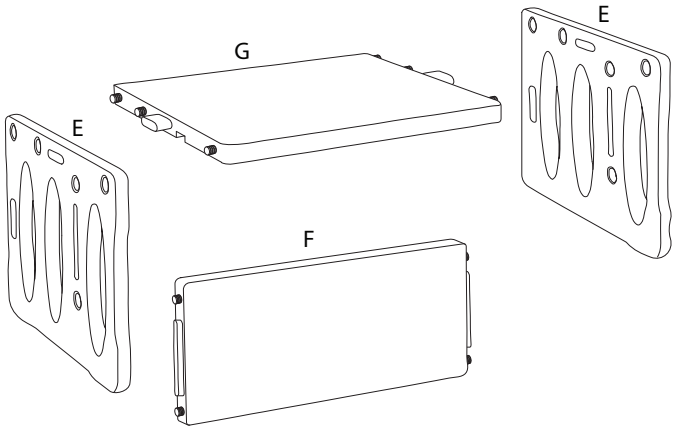
G
E
E
F

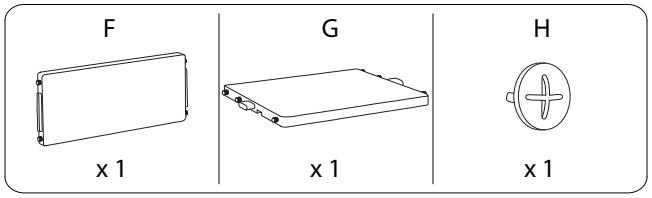
F
x 1
G
x 1
H
x 1

1

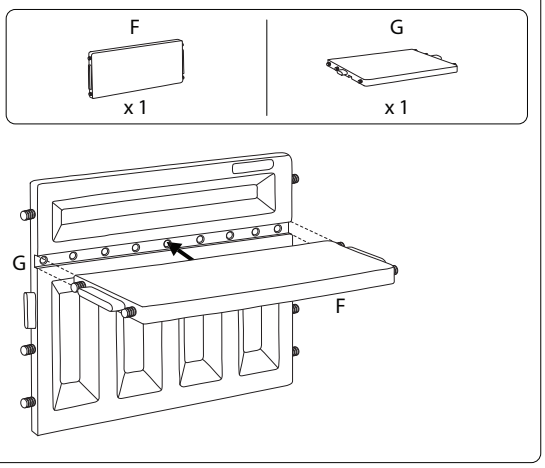
F
x 1
G
x 1
G
F

2

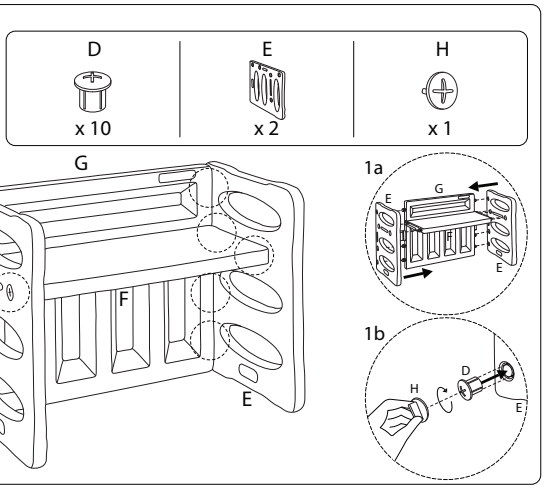
D
x 10
E
x 2
H
x 1
G
F
E
E
1a
G
E
E
1b
D
H
E

!

