CARDIEL

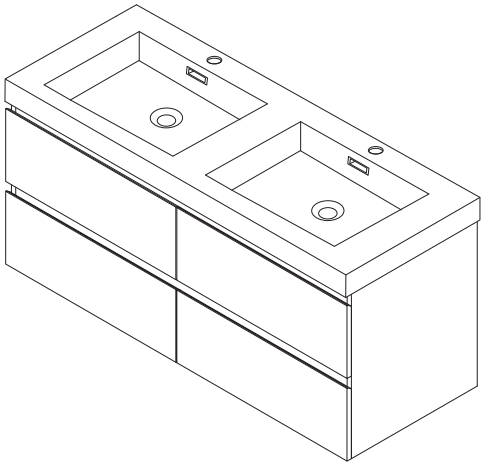

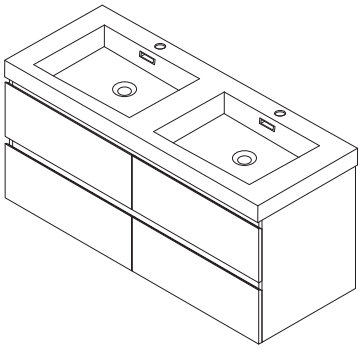

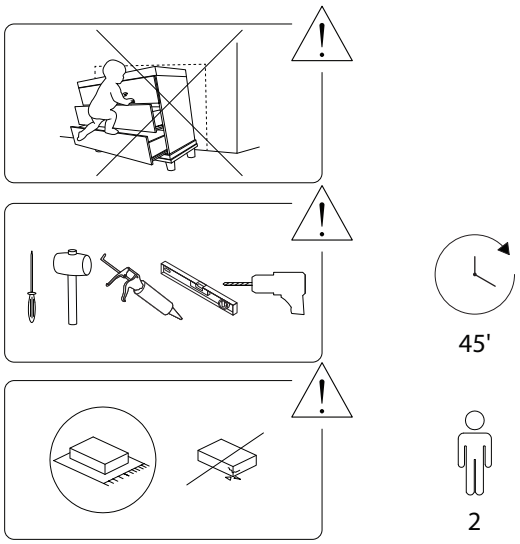

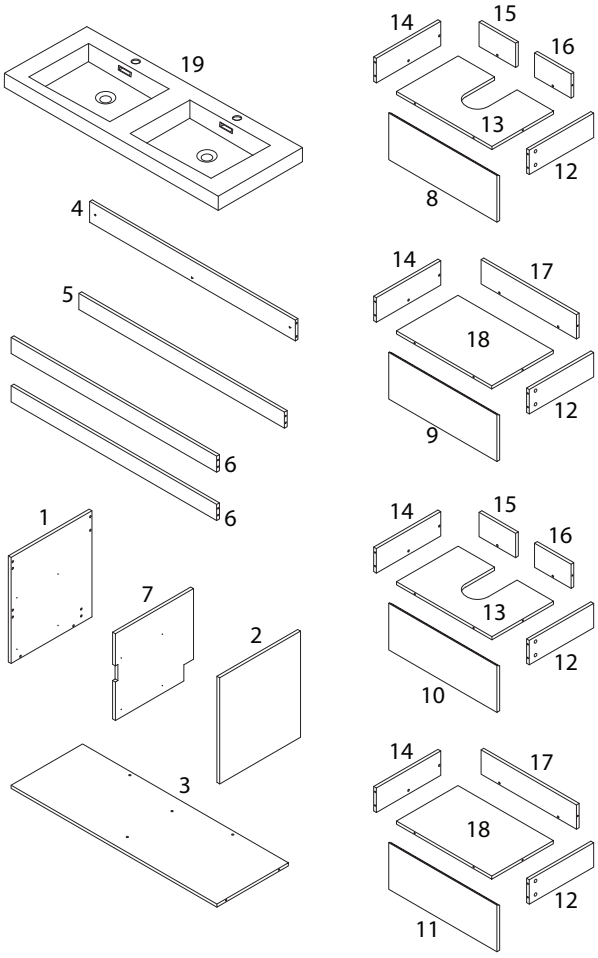

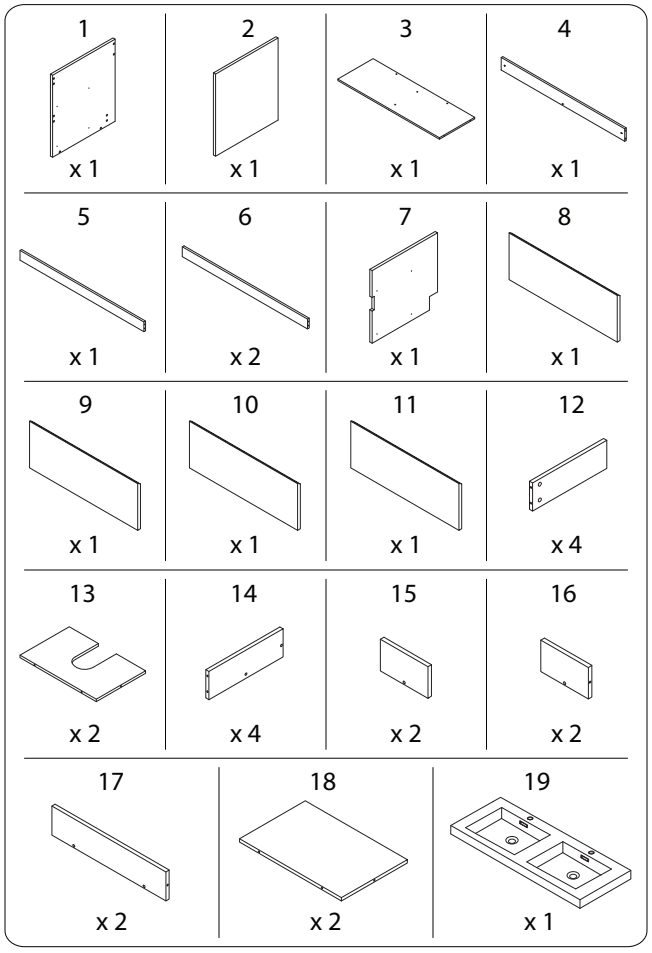

2354/CARDIEL-120/161025/

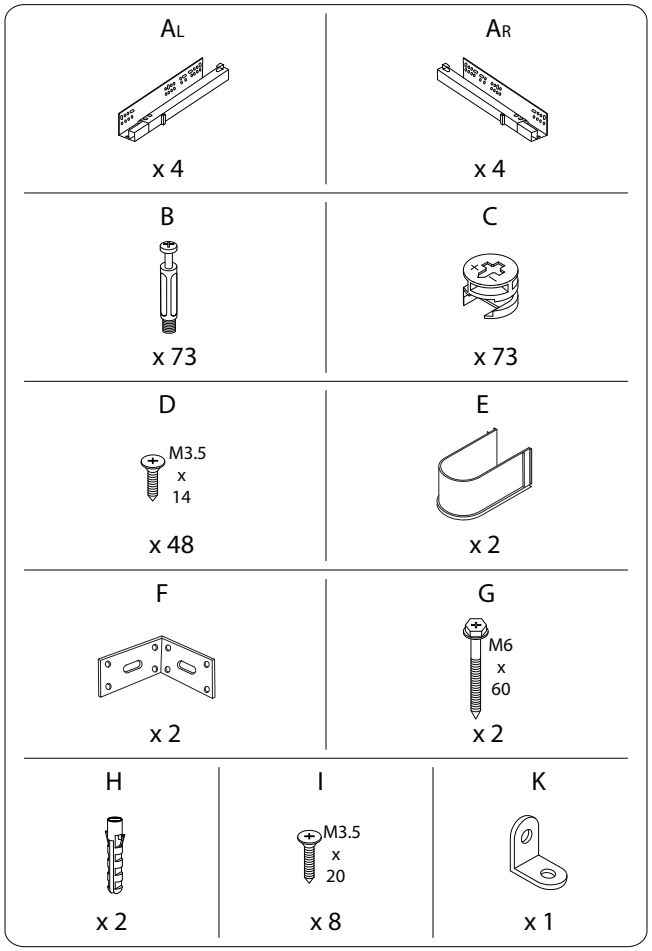
AL
x 4
AR
x 4
B
x 73
C
x 73
D
M3.5
x
14
x 48
E
x 2
F
x 2
G
M6
x
60
x 2
H
x 2
I
M3.5
x
20
x 8
K
x 1

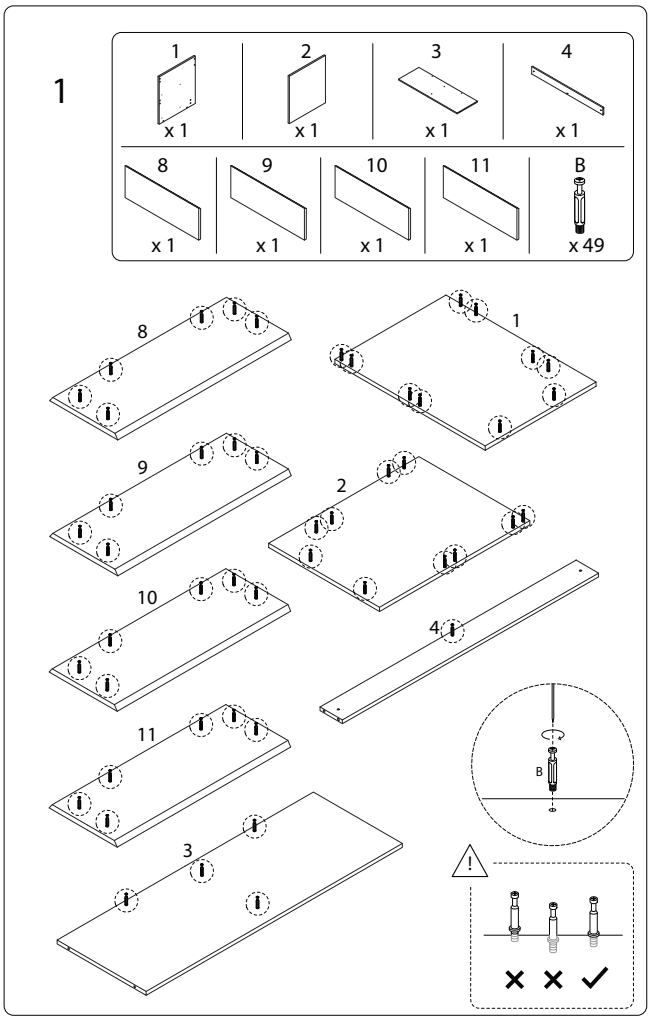
1
1
x 1
2
x 1
3
x 1
4
x 1
8
x 1
9
x 1
10
x 1
11
x 1
B
x 49
8
1
9
2
10
4
11
3
B

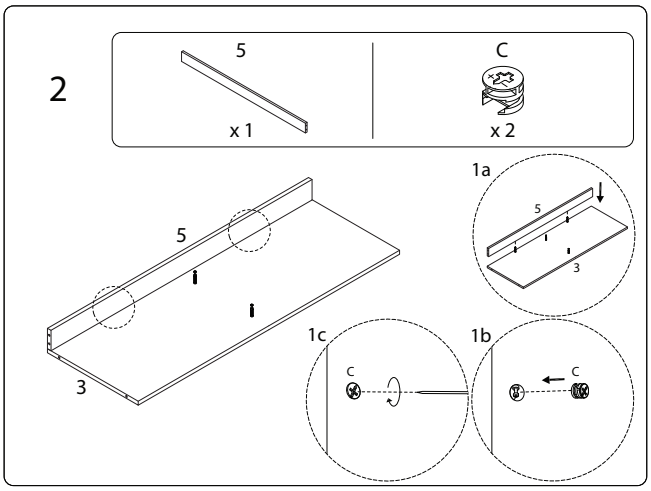
2
5
x 1
C
x 2
5
3
1a
5
3
1c
C
1b
C

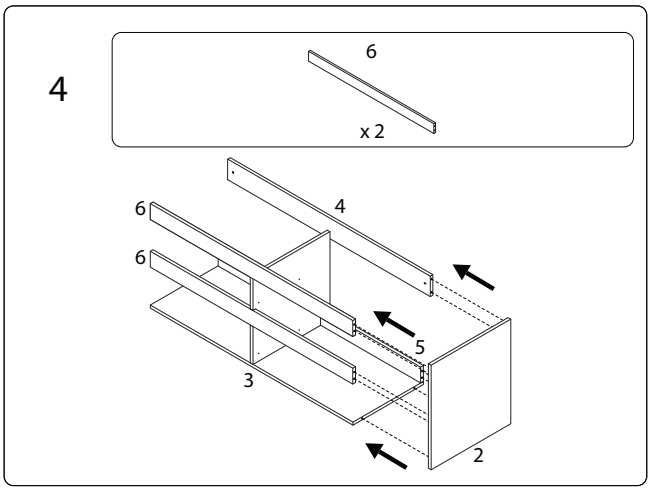
4
6
x 2
6
4
6
5
3
2

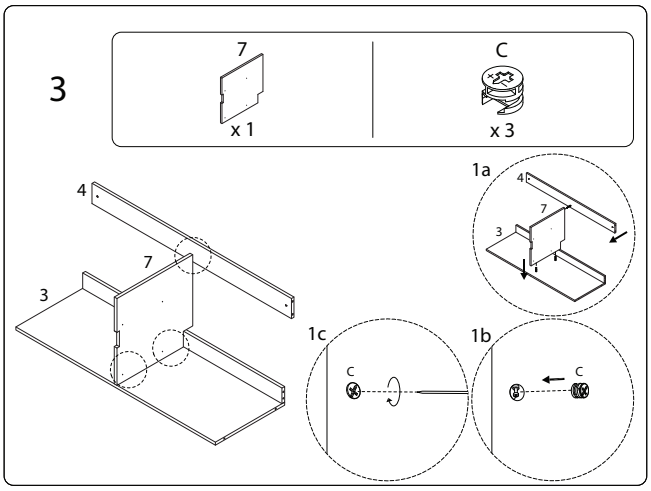
3
7
x 1
C
x 3
4
7
3
1a
4
7
3
1c
C
1b
C

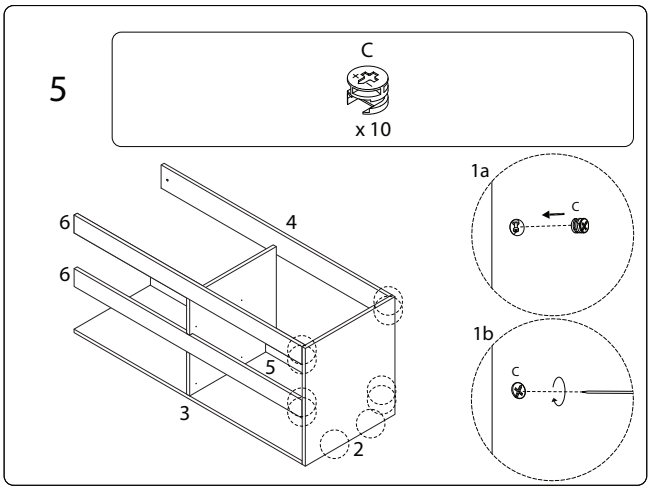
5
C
x 10
6
4
6
5
3
2
1a
C
1b
C

6

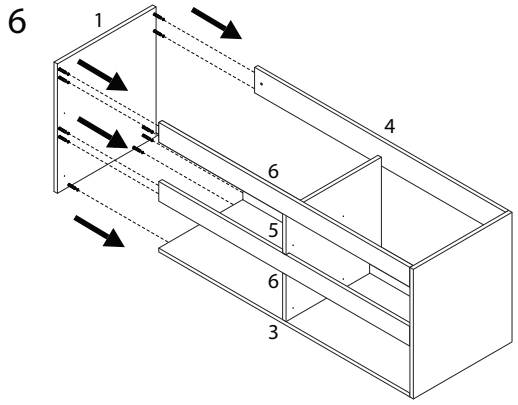

7

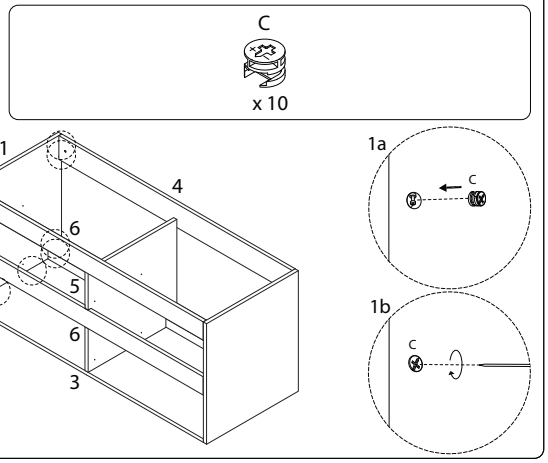

8

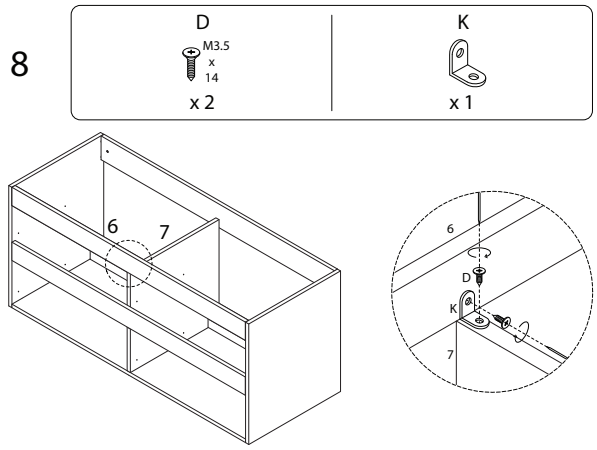

9 x 2

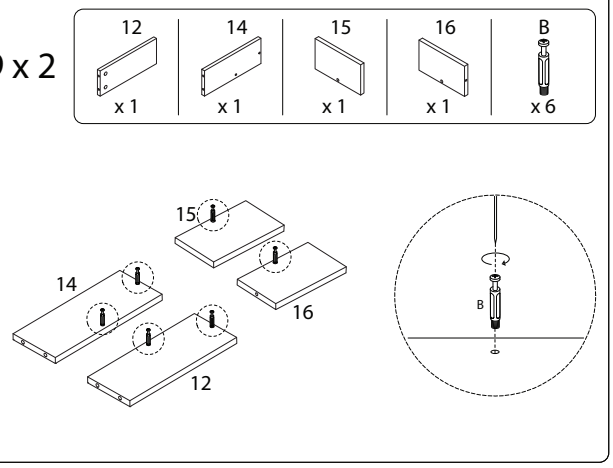

10 x 2

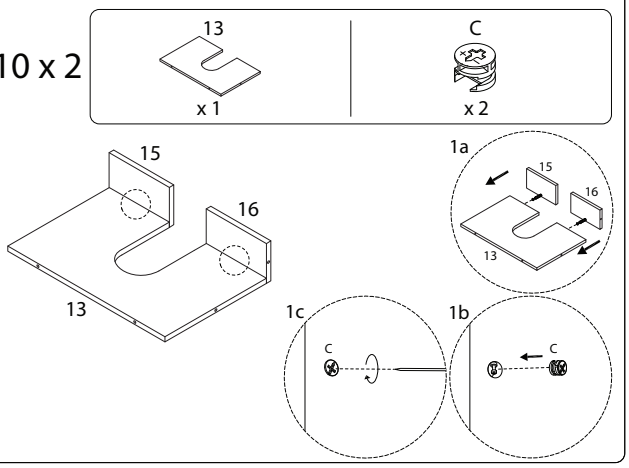

11 x 2

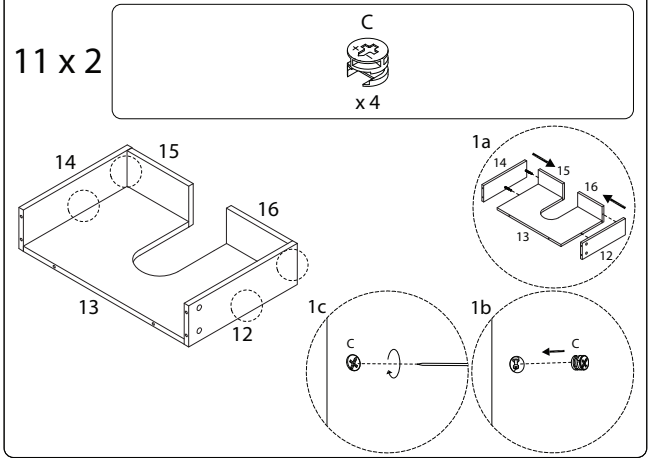

12 x 2

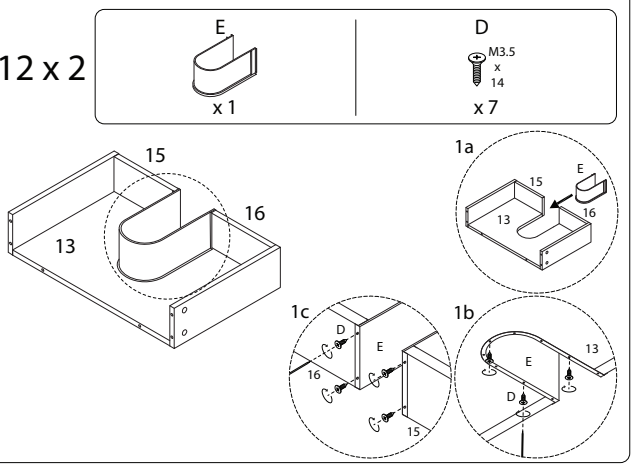

13

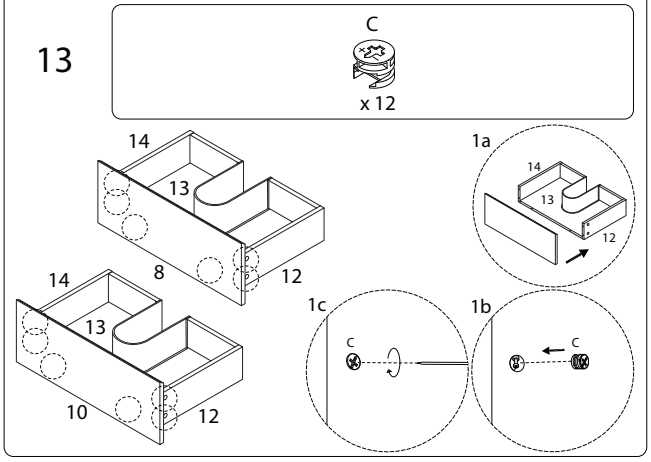

14 x 2

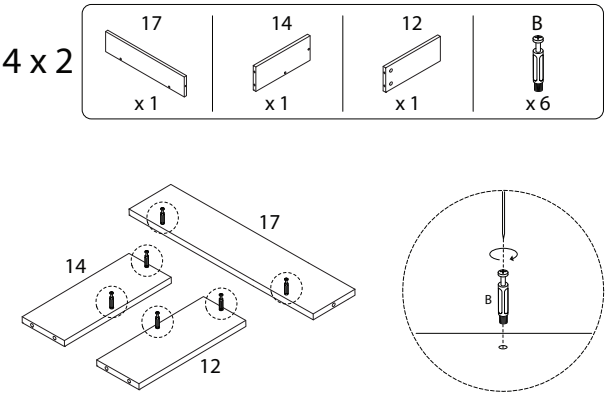

15 x 2

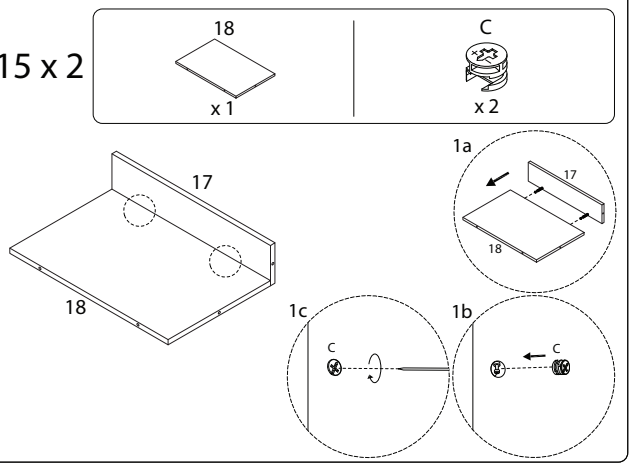

16 x 2

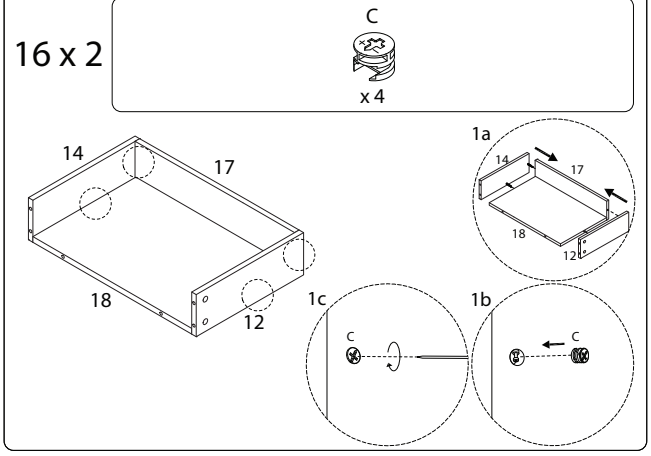

17

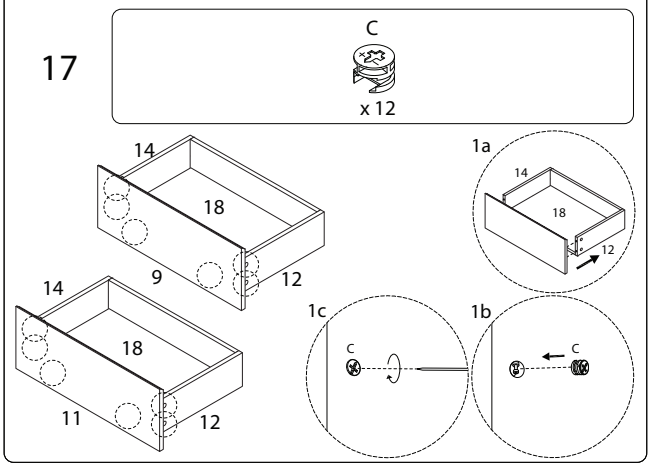

18

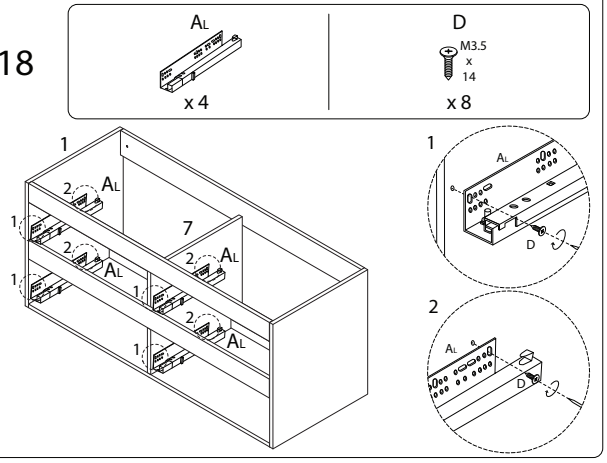

19

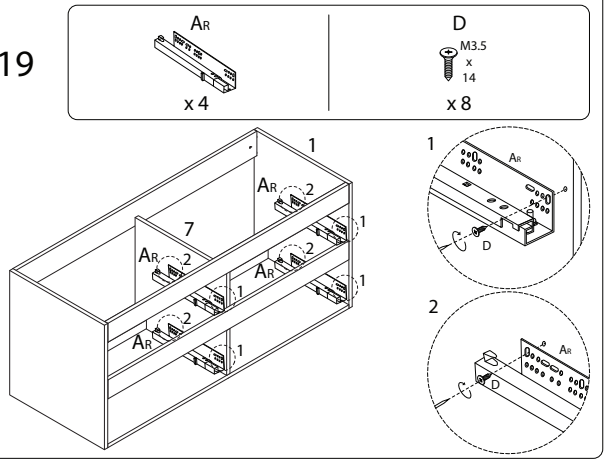

20

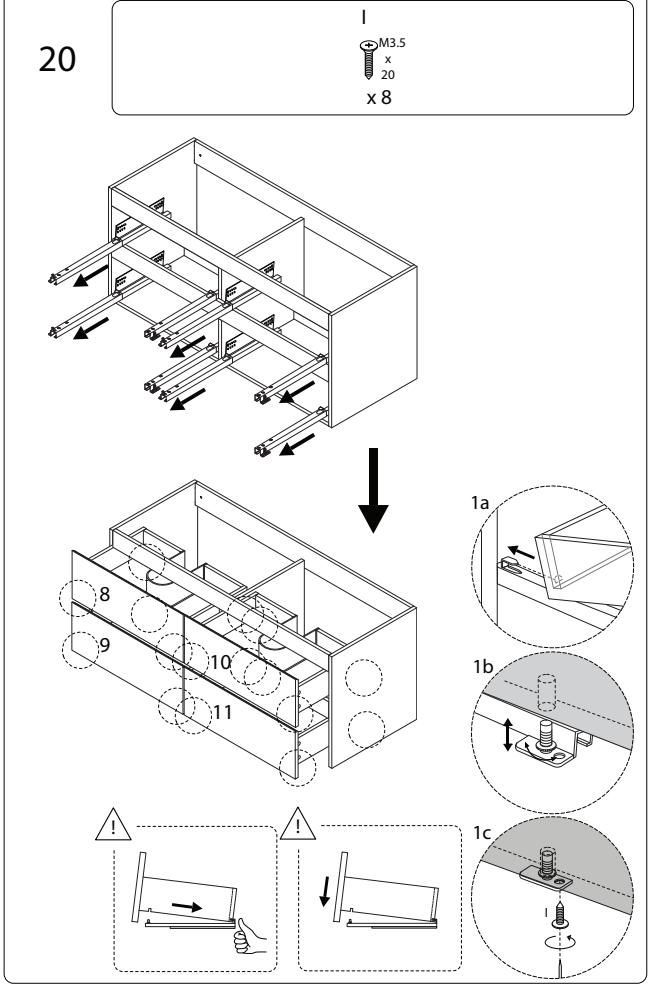

21

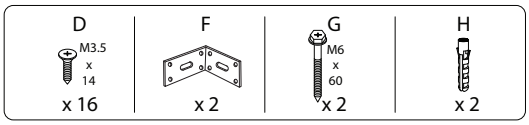
D
M3.5
x
14
x 16
F
x 2
G
M6
x
60
x 2
H
x 2

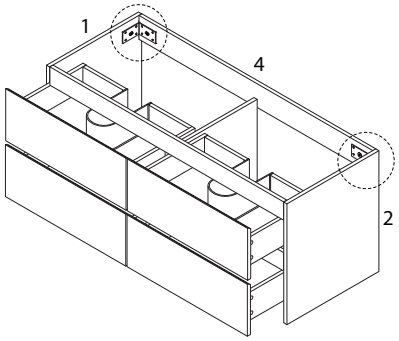
1
4
2

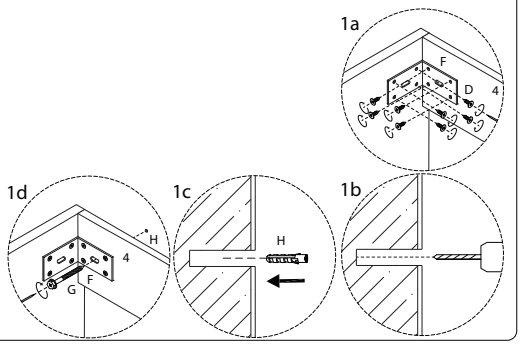
1a
F
D
4
1d
H
4
G
F
1c
H
1b

22

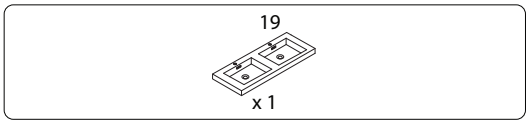
19
x 1

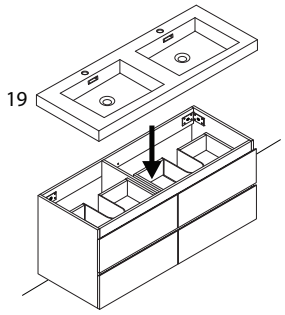
19

23

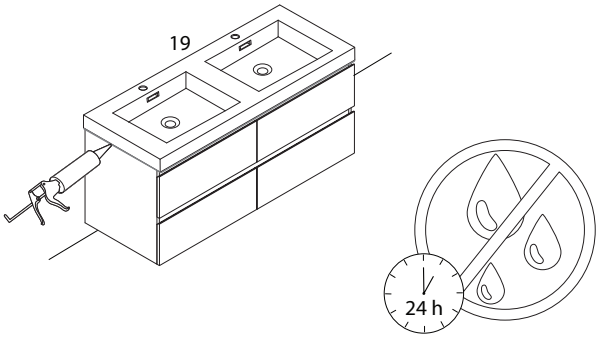
19
24 h