TILCARA

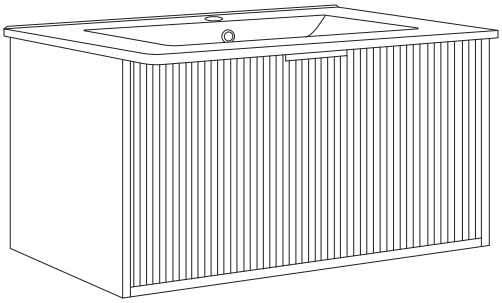

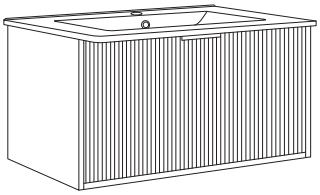

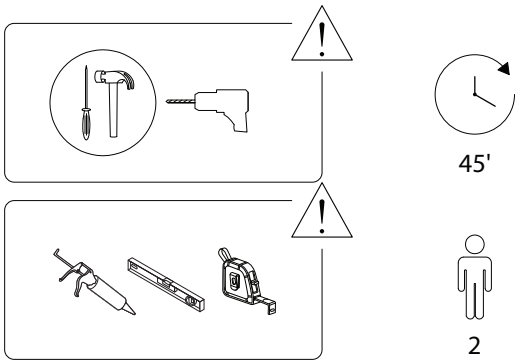

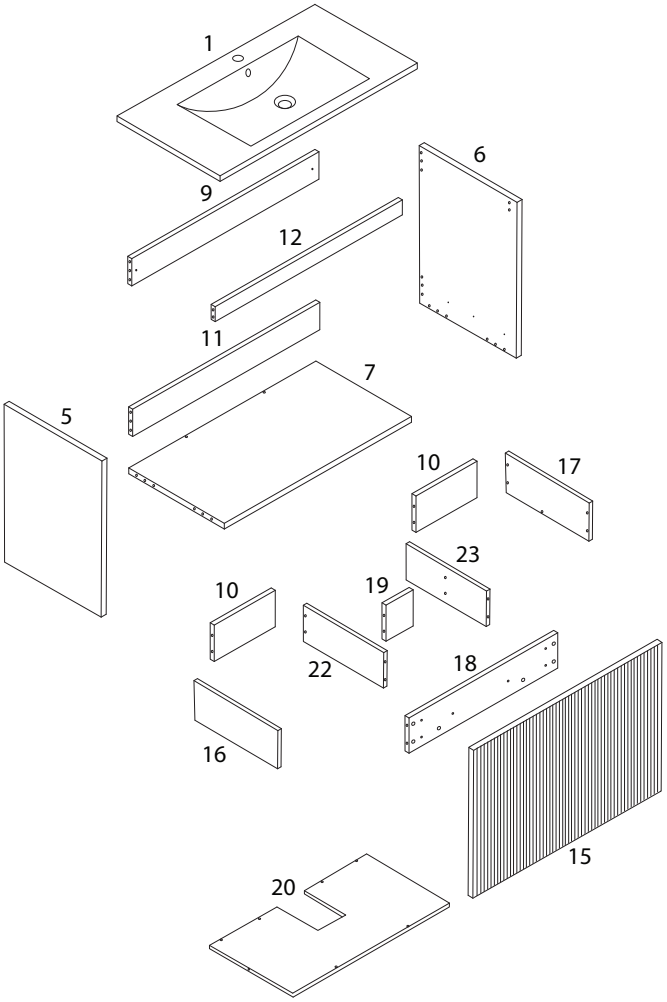

1 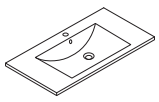 x 1	5 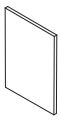 x 1	6 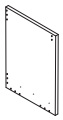 x 1
7 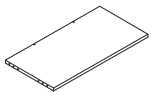 x 1	9 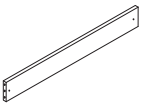 x 1	10  x 2
11 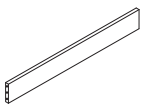 x 1	12 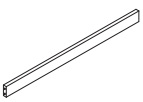 x 1	15 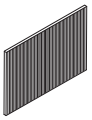 x 1
16  x 1	17  x 1	18 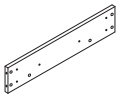 x 1
19  x 1	20 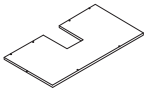 x 1	22  x 1	23  x 1

N1	N2	N4
		
x 46	x 46	x 12
N5	**N7L**	**N7R**
	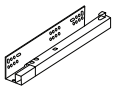	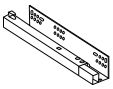
x 1	x 1	x 1
N10	**N11**	**N12**
		
x 26	x 4	x 2
N13A	**N13B**	**N13C**
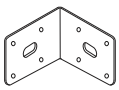	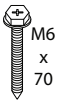	
x 2	x 2	x 2

1

5	6	7	N1
x 1	x 1	x 1	x 18

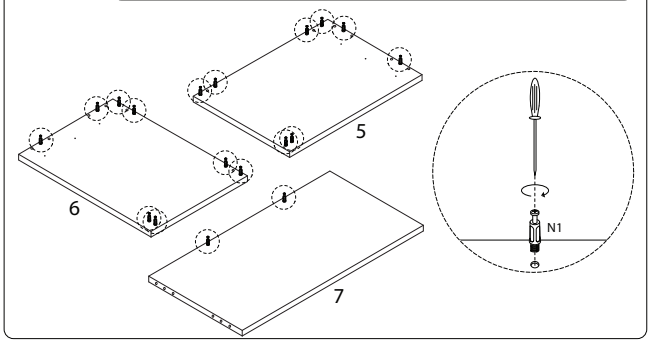

2

9	11	N4
x 1	x 1	x 12

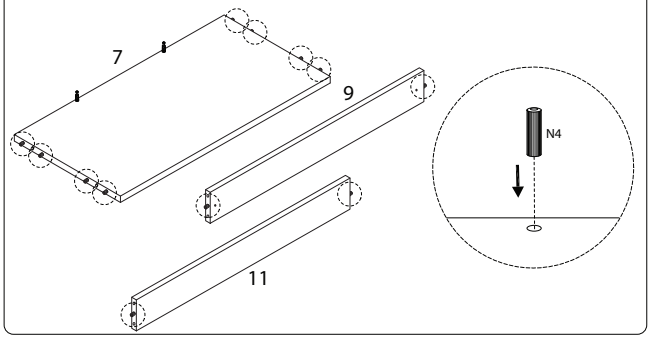

3

11	N2
x 1	x 2

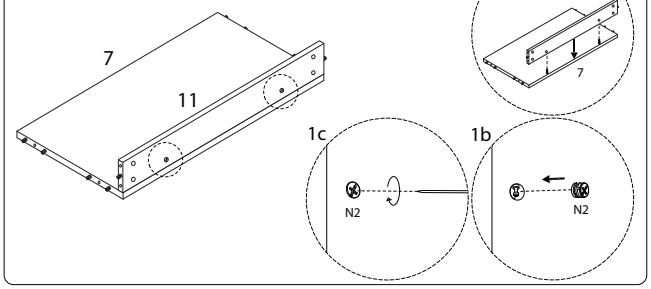

5

N2
x 8

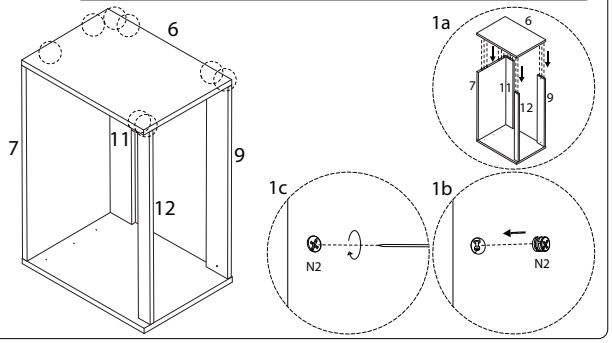

4

12	N2
x 1	x 8

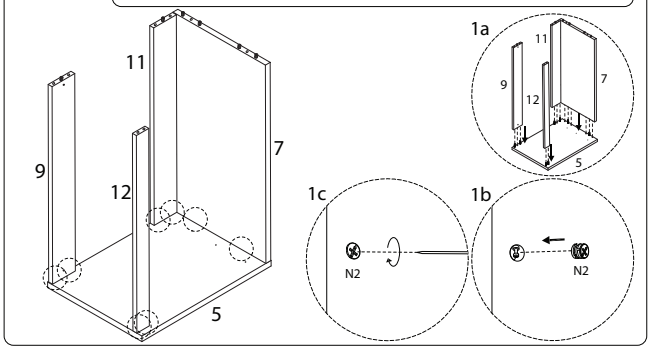

6

N7R	N10
x 1	x 3

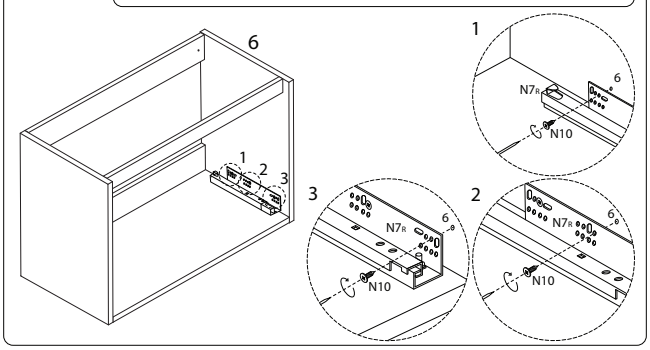

7

N7L	N10
x 1	x 3

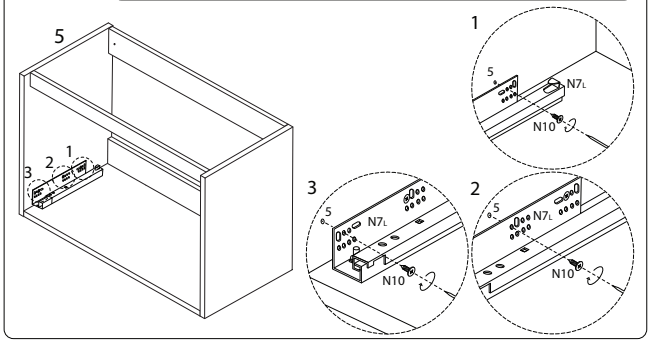

8

16	17	18	20	22	23	N1
x 1	x 1	x 1	x 1	x 1	x 1	x 28

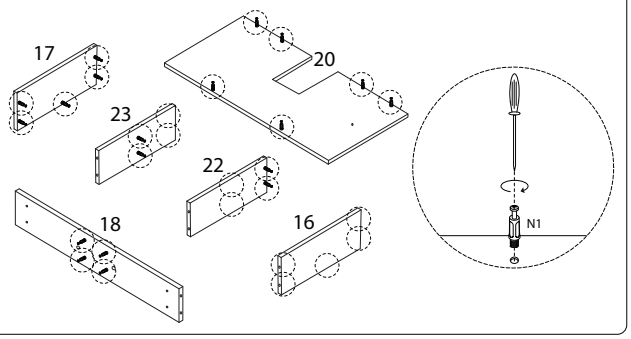

8/15

9

19	N2
x 1	x 4

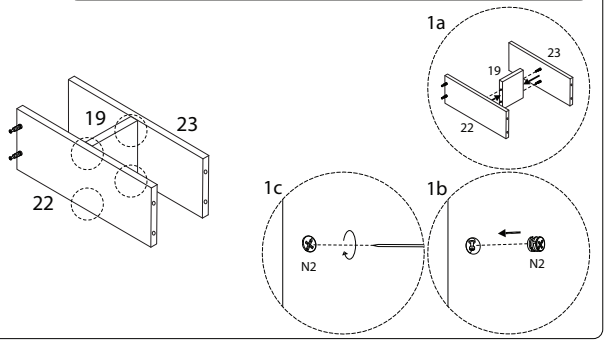

10

10	N2
x 2	x 8

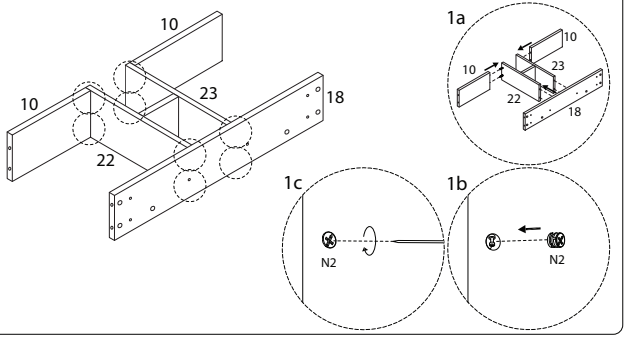

9/15

11

N2
x 6

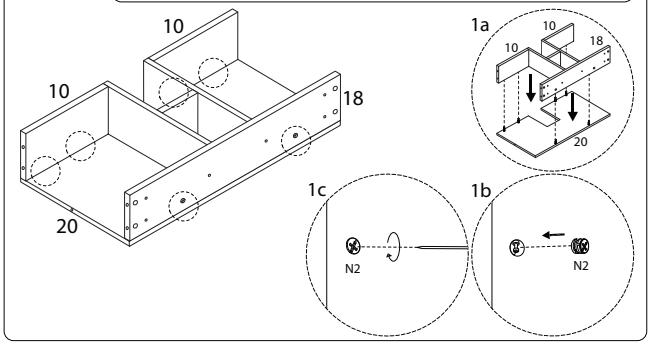

12

N2
x 10

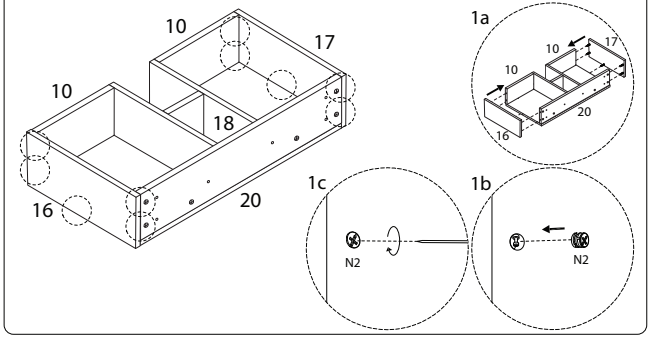

10/15

13

15	N12
x 1	x 2

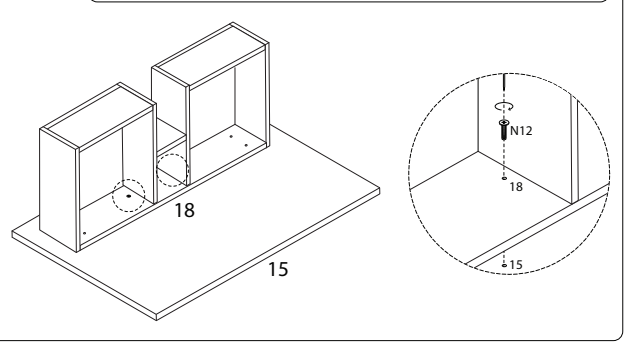

14

N5	N10
x 1	x 2

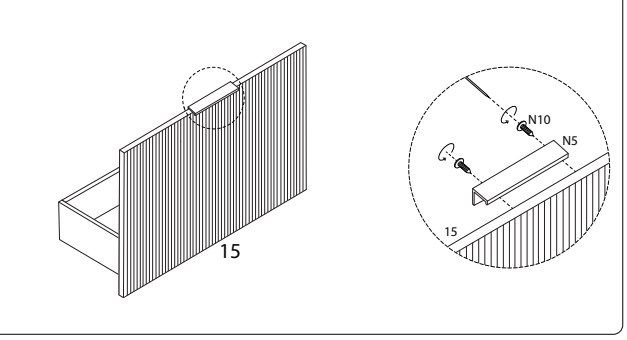

11/15

15

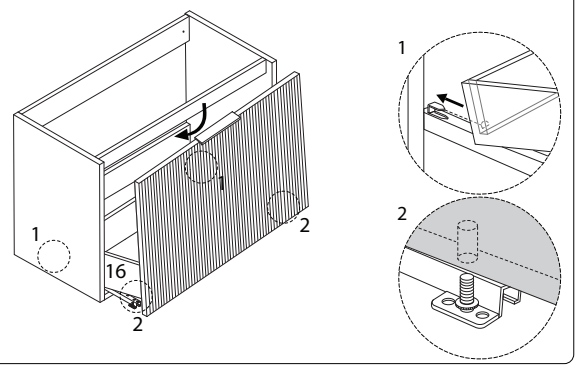

16

N10
M4 x 14
x 2

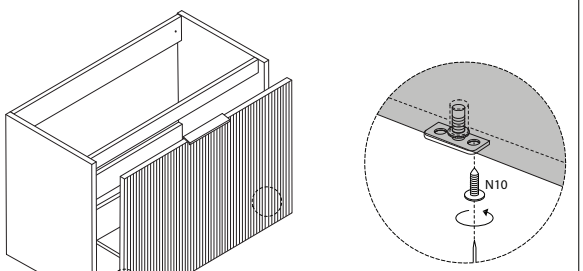

17

N11
M4 x 25
x 4

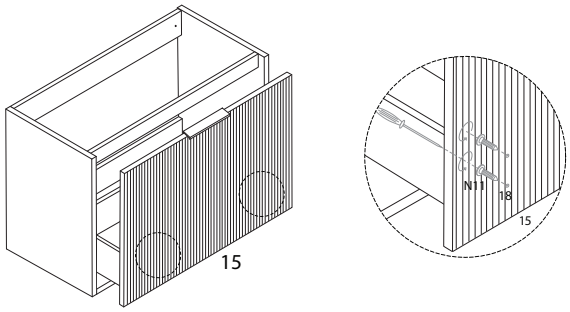

18

N10
M4 x 14
x 16

N13A
x 2

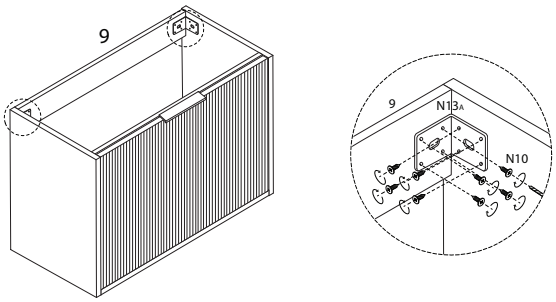

19

N13B
M6 x 70
x 2

N13C
x 2

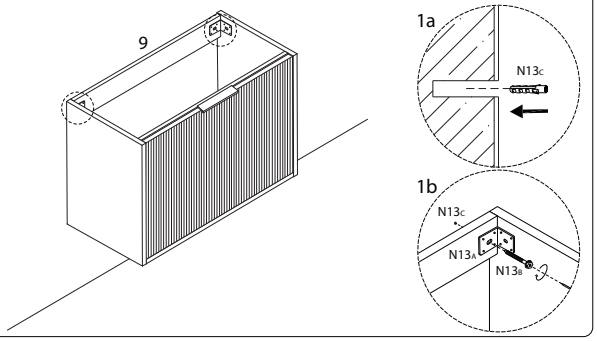

21

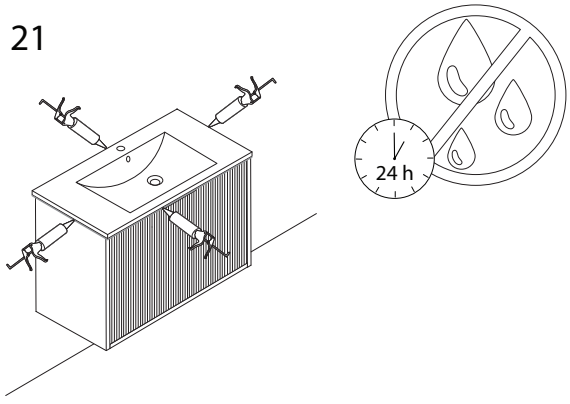

20

1
x 1

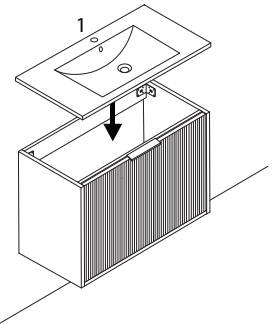

!

