BARCALDINE





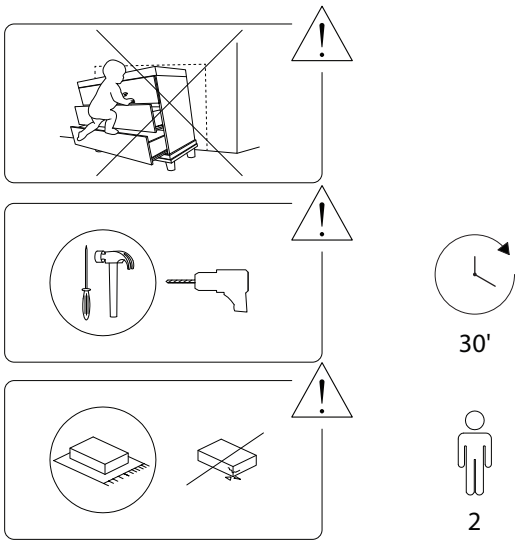

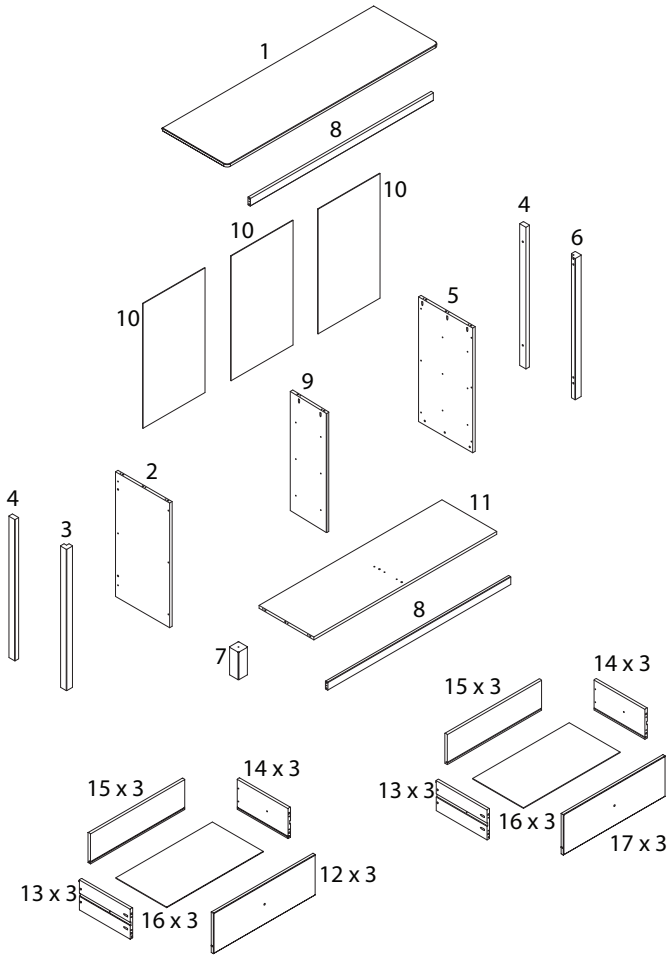

1 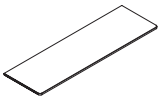 x 1	2  x 1	3  x 1
4  x 2	5  x 1	6 x 1
7  x 1	8 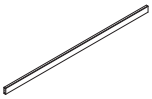 x 2	9  x 1
10  x 3	11 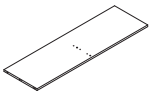 x 1	12  x 3	13  x 6
14  x 6	15  x 6	16 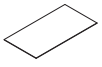 x 6	17  x 3

A	B	C
		
x 52	x 81	x 24
D	**E**	**F**
		
x 12	x 6	x 30
G	**H**	**I**
		
x 6	x 12	x 2
J	**K**	**L**	**M**
			
x 5	x 2	x 2	x 1

1

2	4	5	8	9	11	A
x 1	x 2	x 1	x 2	x 1	x 1	x 28

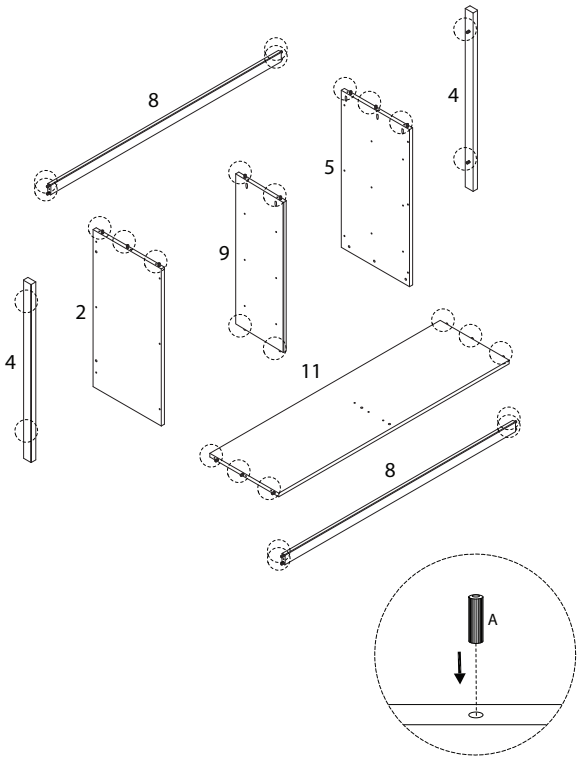

2

3	6	B
x 1	x 1	x 12

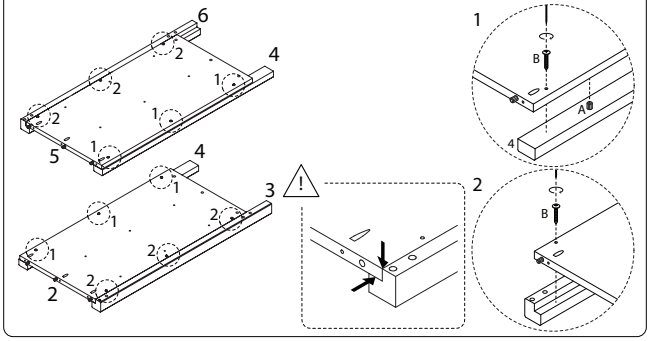

4

C	H
x 12	x 6

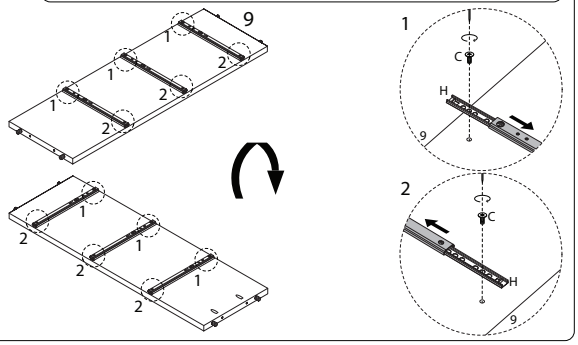

3

C	H
x 12	x 6

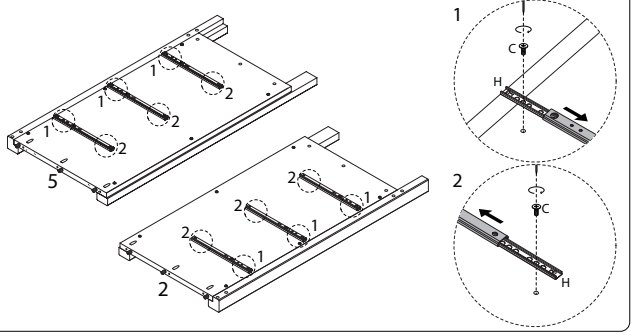

5

7	B
x 1	x 1

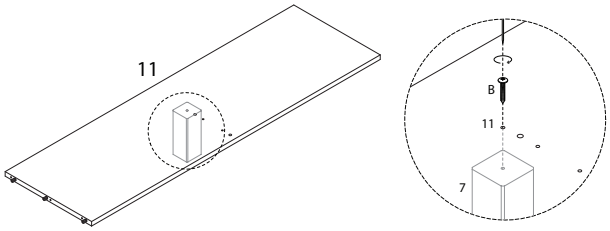

6

B
M4 x 30
x 5

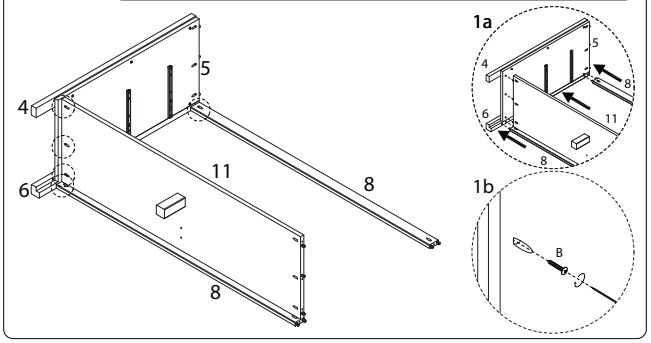

8

B
M4 x 30
x 2

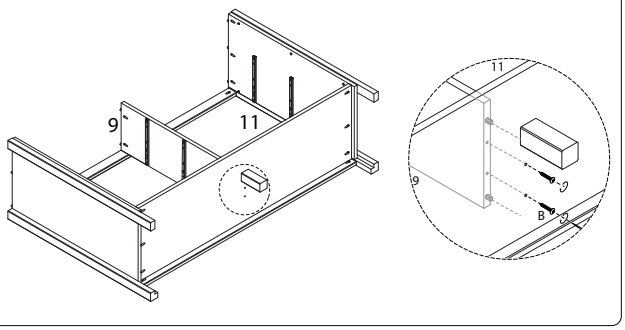

7

B
M4 x 30
x 5

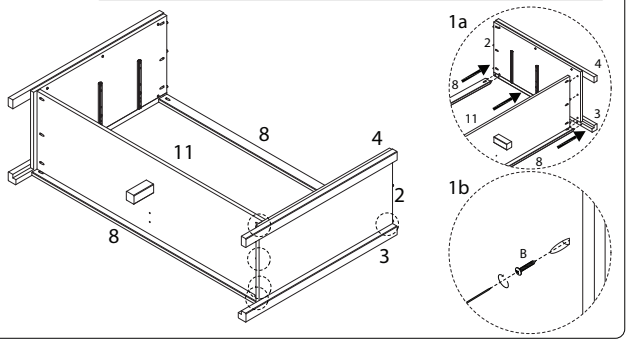

9/18

2545/BARCALDINE/280926/

9

1
x 1

B
M4 x 30
x 8

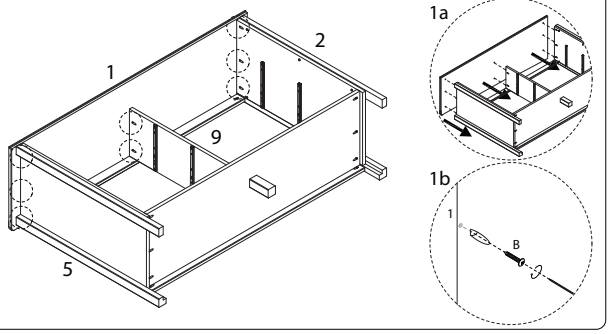

10/18

2545/BARCALDINE/280926/

10

J
M3.5 x 14
x 4

K
x 2

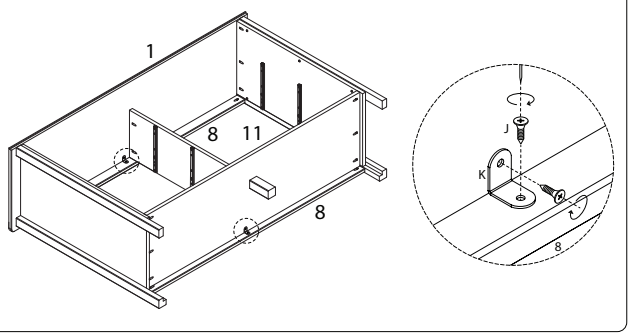

12

F
x 30

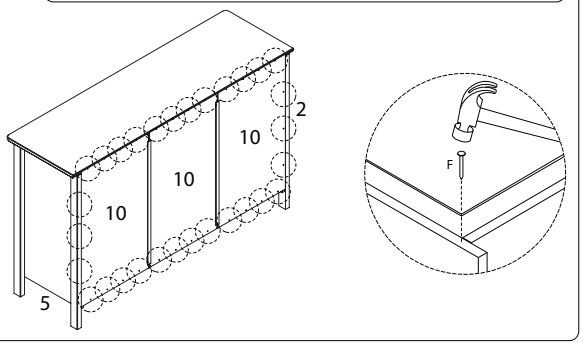

11

10
x 3

I
x 2

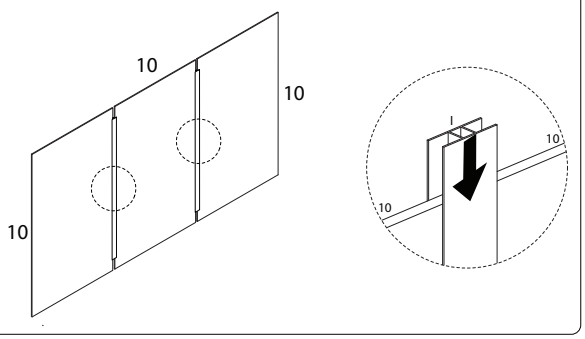

11/18

2545/BARCALDINE/280926/

13

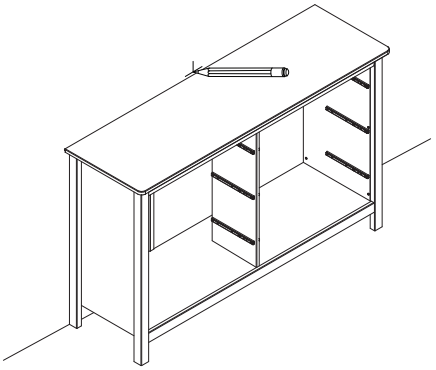

12/18

2545/BARCALDINE/280926/

14

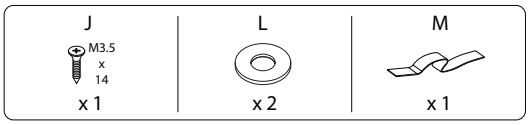

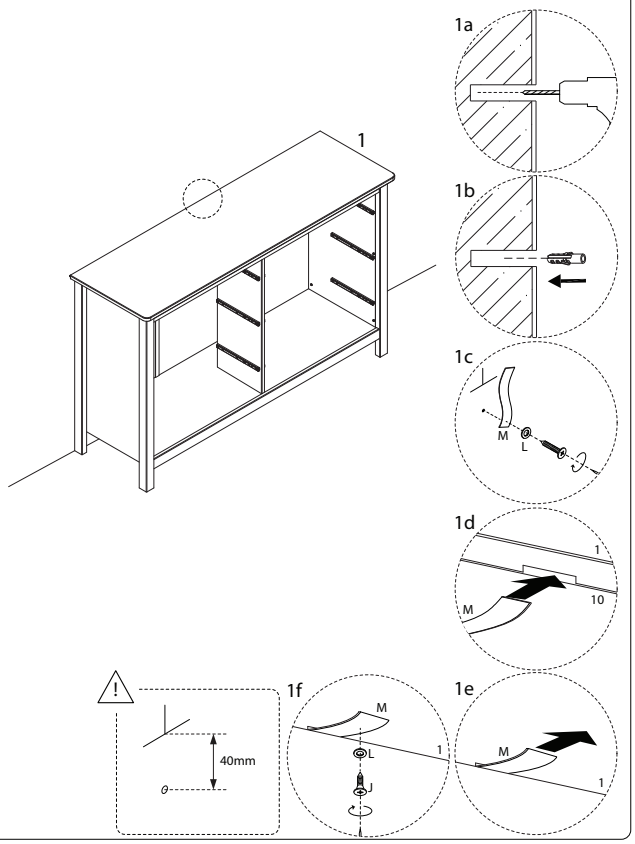

15 x 6

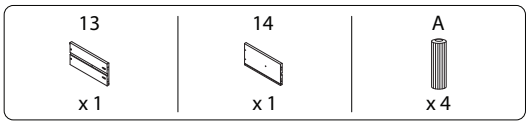

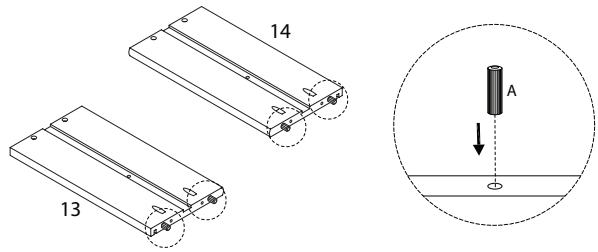

16 x 3

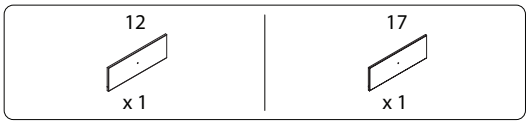

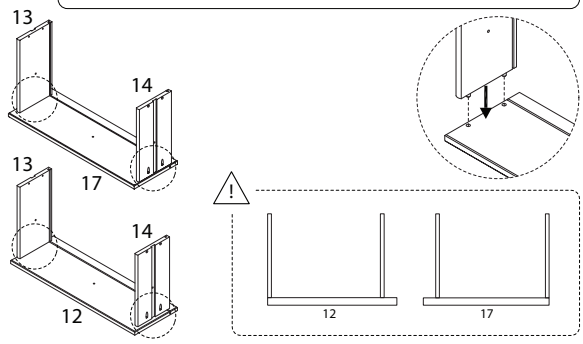

17 x 3

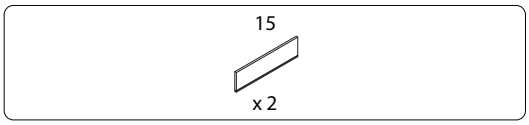

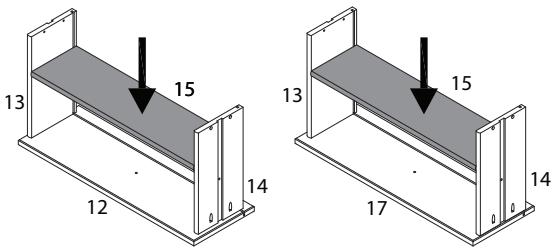

19 x 3

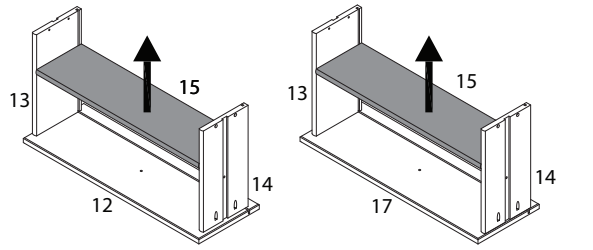

18 x 3

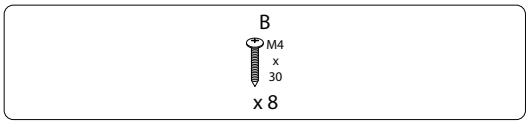

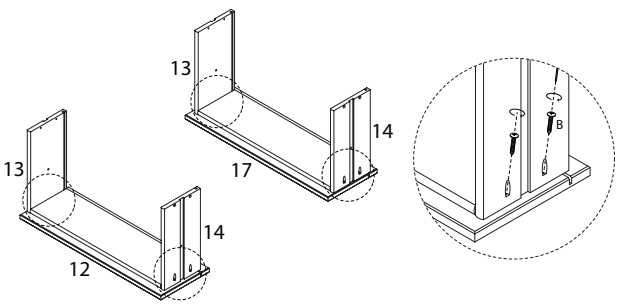

20 x 3

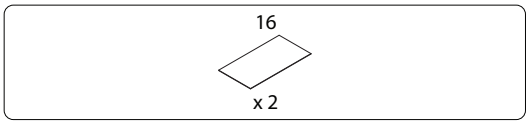

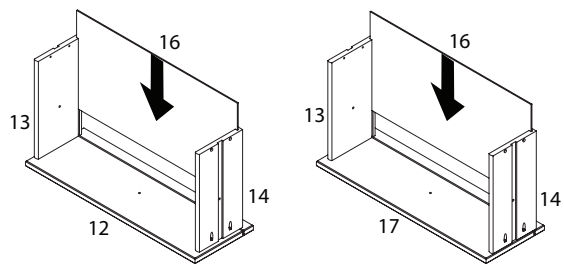

21 x 3

B

M4 x 30

x 8

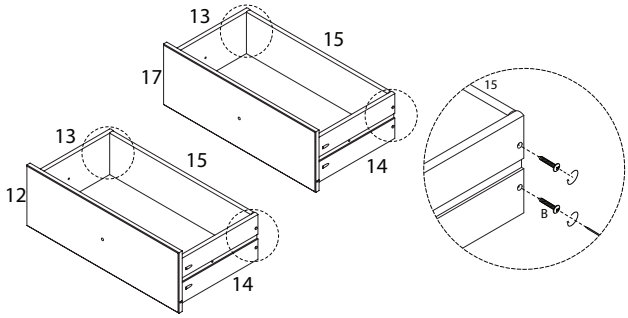

22 x 3

E

x 2

G

M4 x 22

x 2

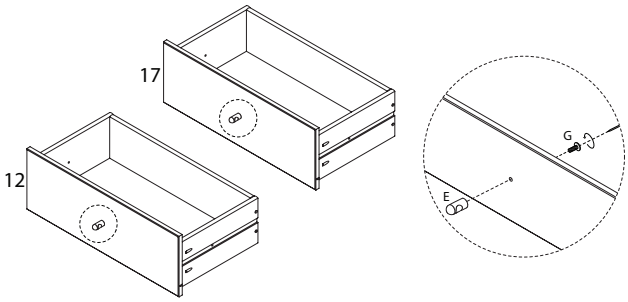

23

D

M4 x 12

x 12

