LUVOS

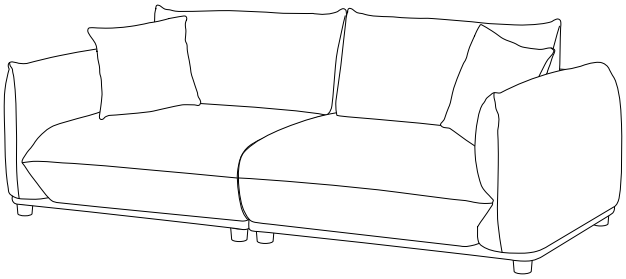

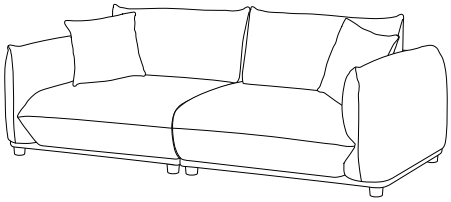

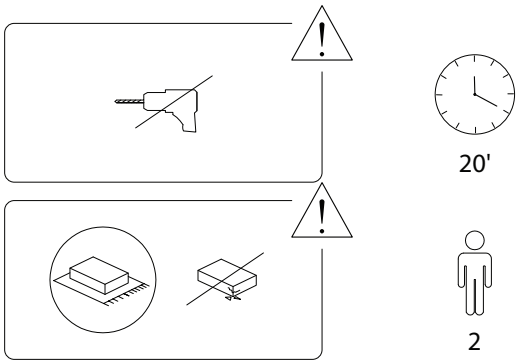

Beliani

Beliani
1919/LUVOS/260124/

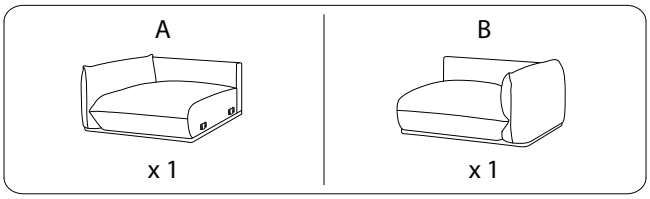

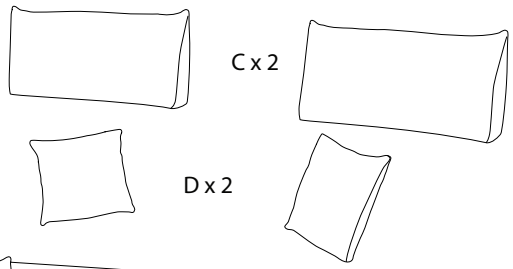

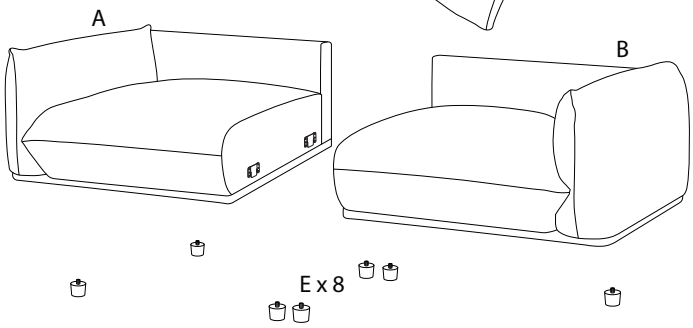

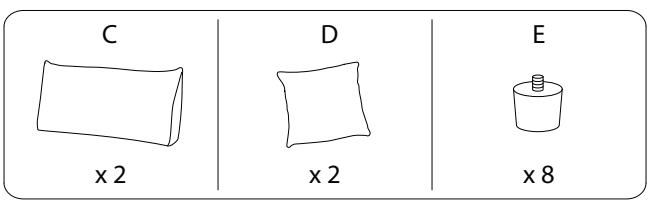

Beliani

Beliani
1919/LUVOS/260124/

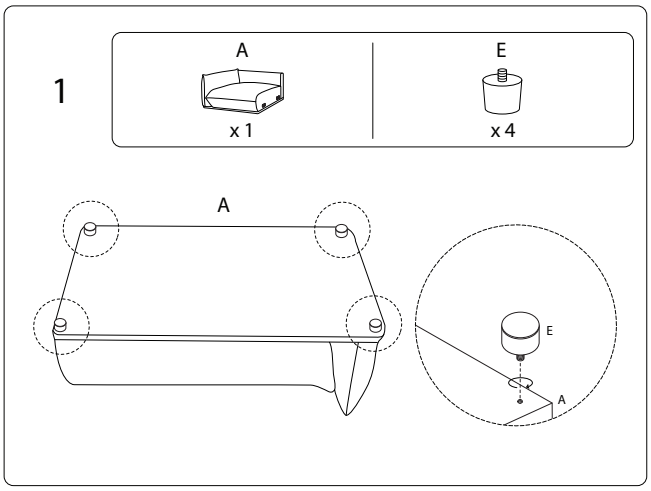

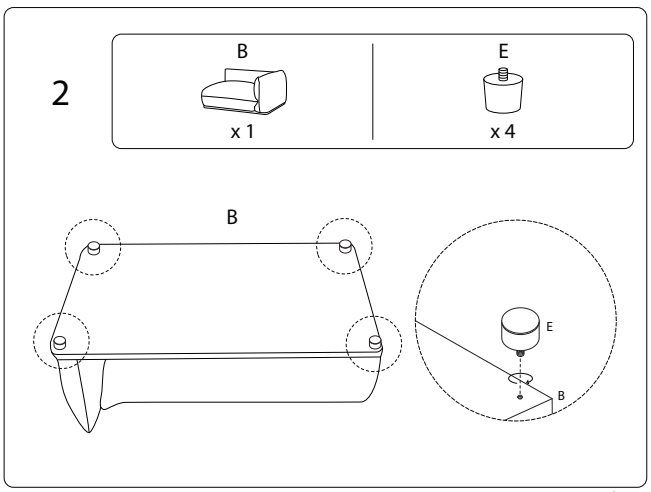

Beliani
1919/LUVOS/260124/

3

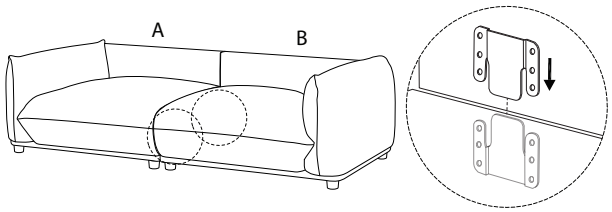

4

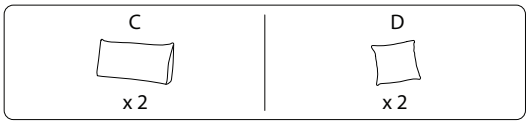

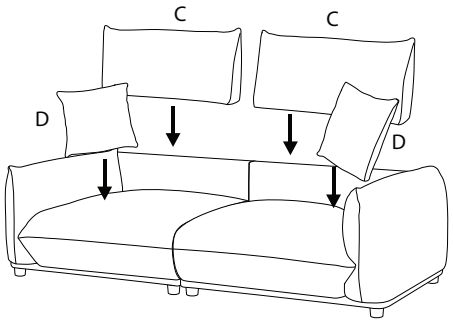

Beliani
1919/LUVOS/260124/