

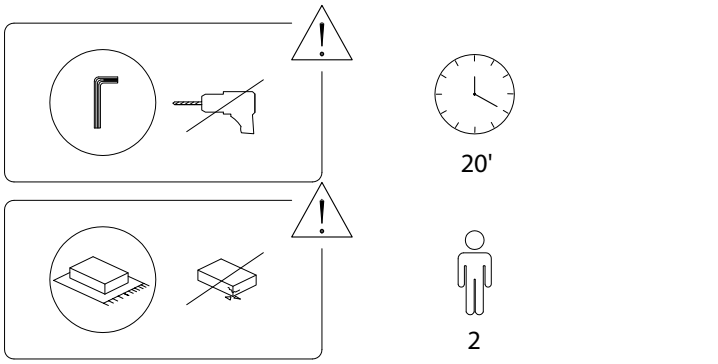

1/3

A	B	C
		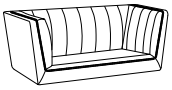
x 2	x 2	x 1

A x 2 

B x 2 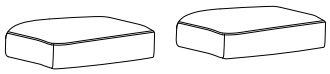

C 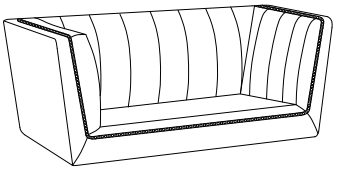



D x 4

D	E	F	G
	 M6 x 18		
x 4	x 8	x 8	x 1

2/3

1

C	D	E	F	G
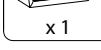			 M6 x 18	
x 1	x 4	x 8	x 8	x 1

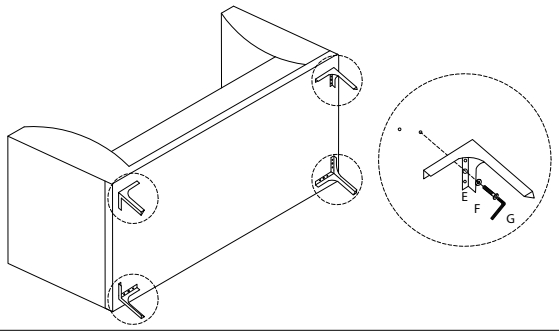

2

A	B
	
x 2	x 2

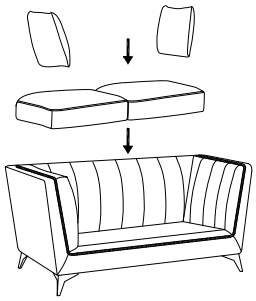

3/3