BONDO

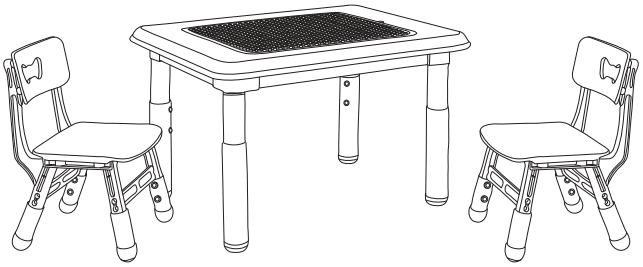

1/11

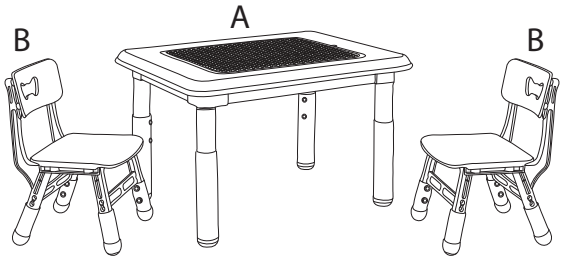

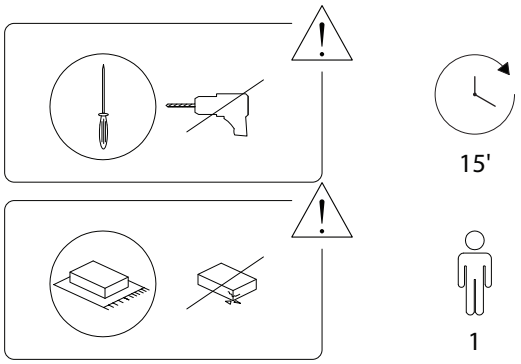

2/11

2902/BONDO/031126/

A

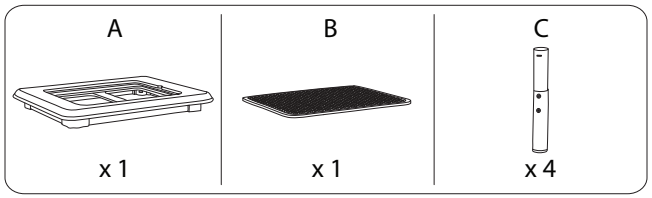

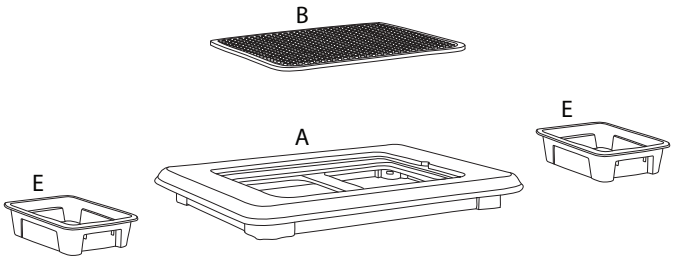

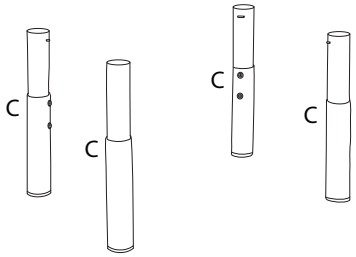

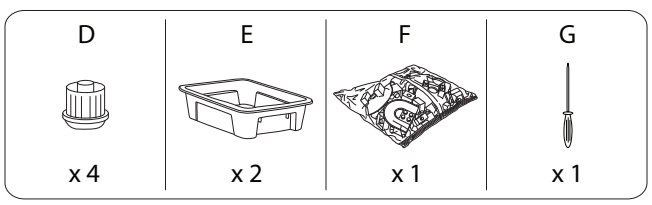

3/11

2902/BONDO/031126/

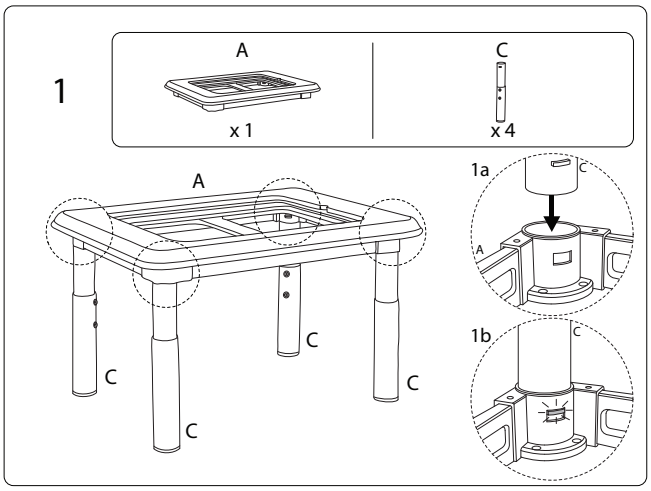

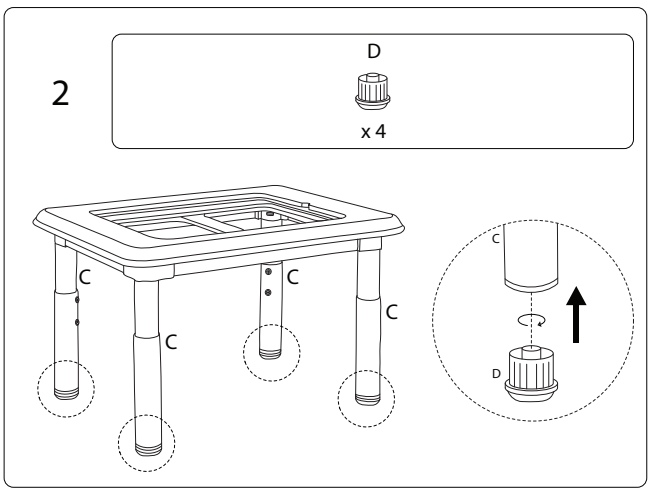

4/11

2902/BONDO/031126/

3

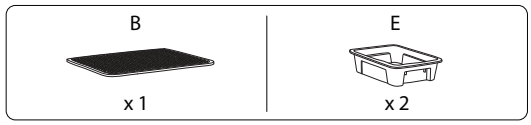
B
x 1
E
x 2

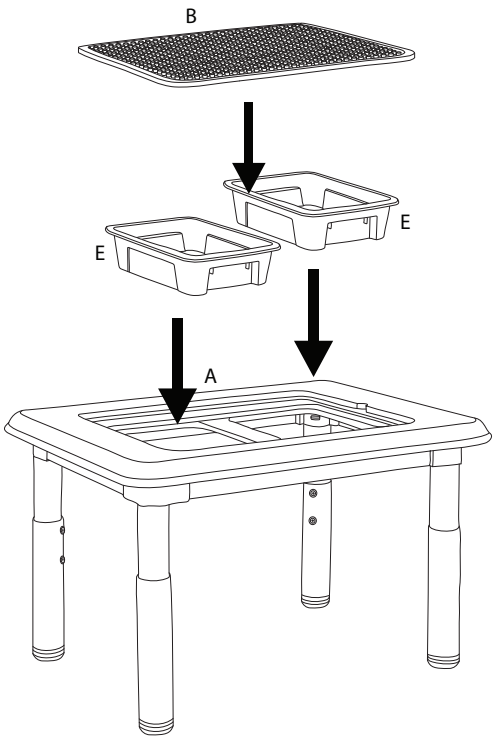
B
E
E
A

!

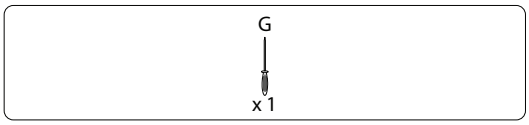
G
x 1

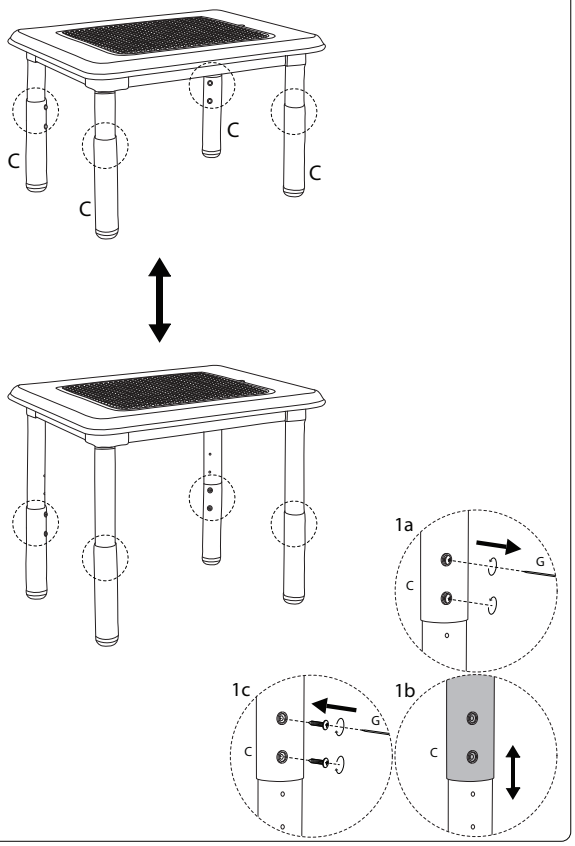
C
C
C
1a
G
C
1c
G
C
1b
C

!

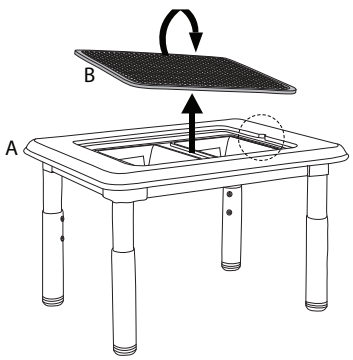
B
A

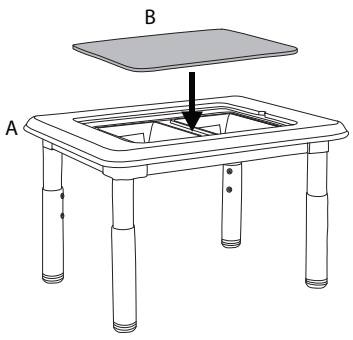
B
A

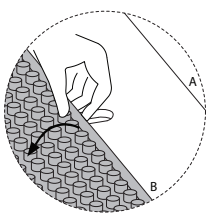
A
B

B x 2

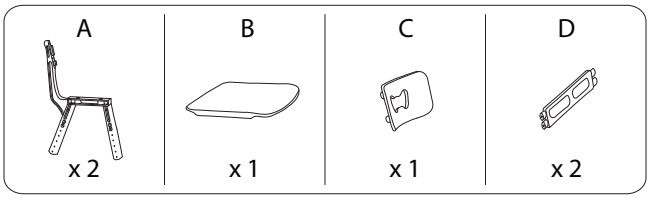
A
x 2
B
x 1
C
x 1
D
x 2

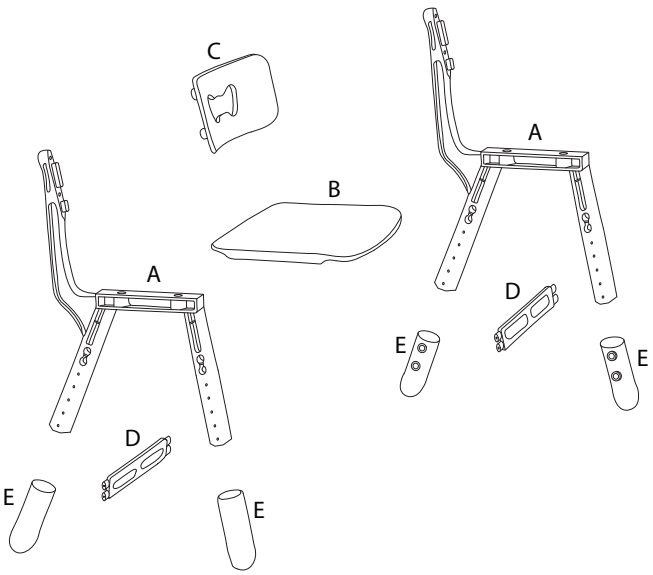
C
A
B
A
D
E
E
D
E
E

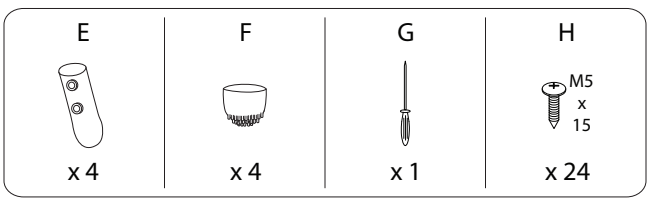
E
x 4
F
x 4
G
x 1
H
M5
x
15
x 24

1 x 2

A	E	F	G	H
x 1	x 2	x 2	x 1	x 8

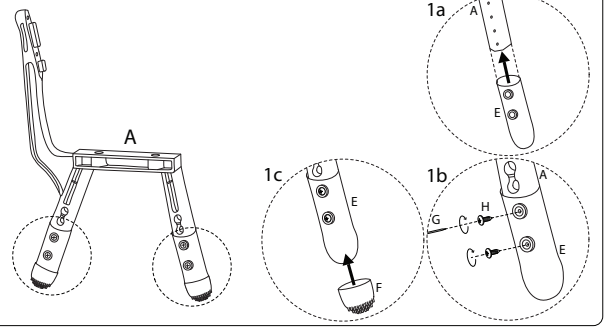

2

D	G	H
x 2	x 1	x 8

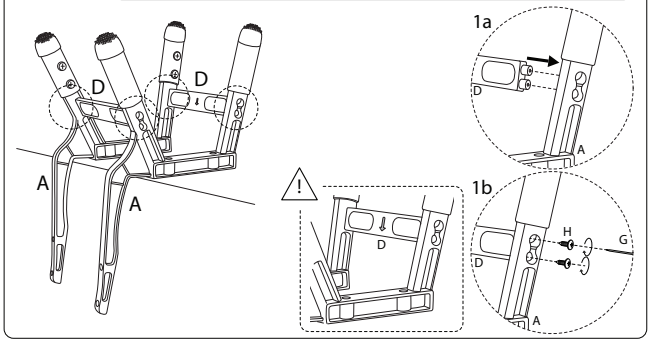

2902/BONDO/031126/

3

B	G	H
x 1	x 1	x 4

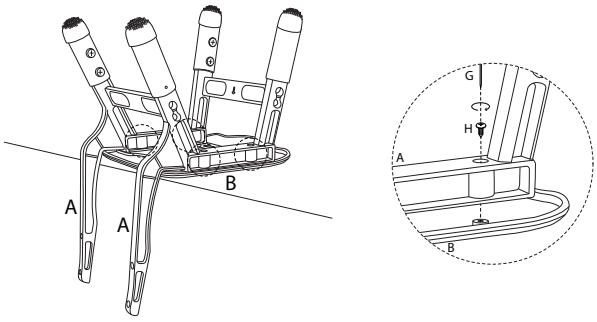

4

C	G	H
x 1	x 1	x 4

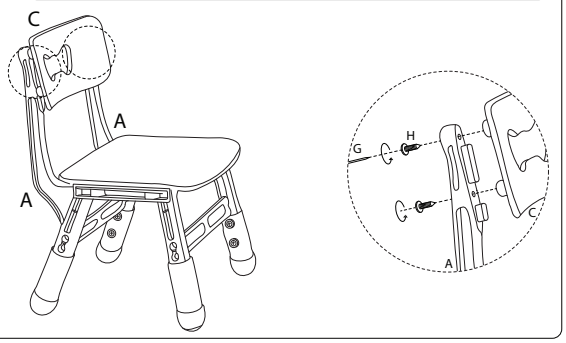

2902/BONDO/031126/

!

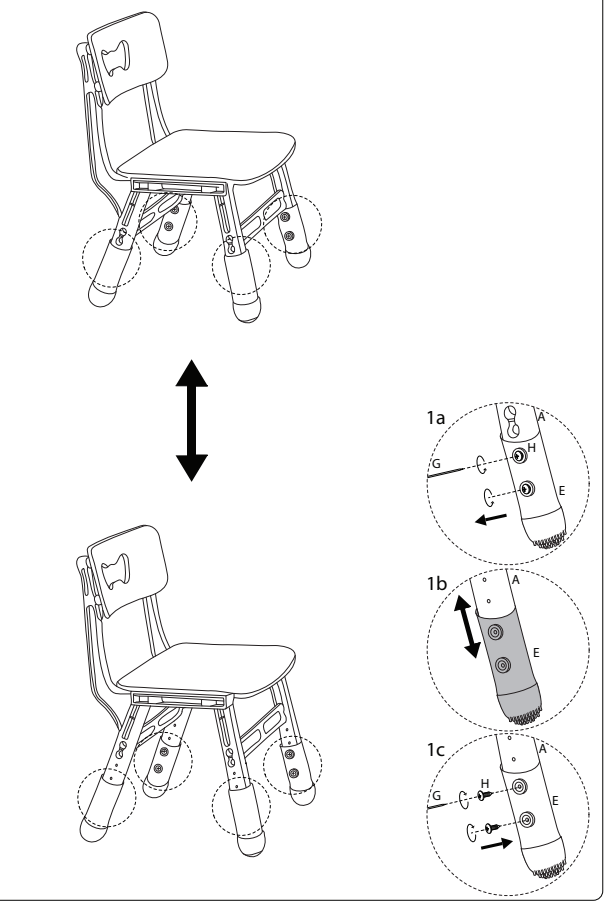

2902/BONDO/031126/