MOURA

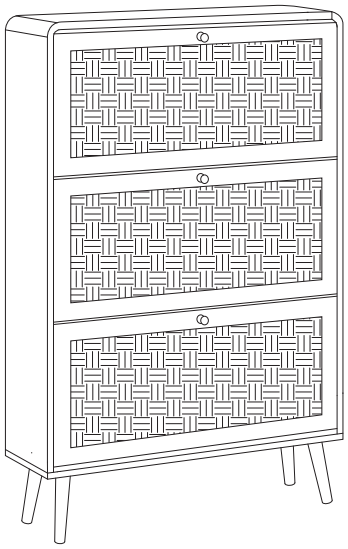

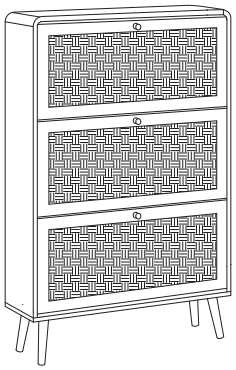

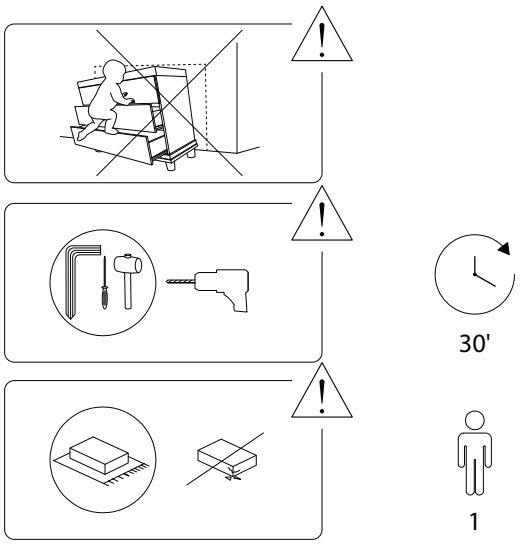

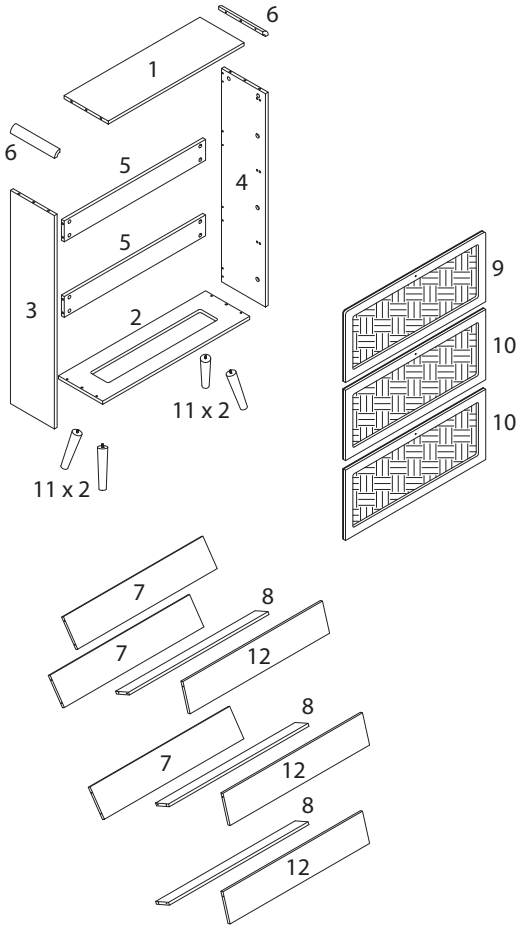

1 x 1	2 x 1	3 x 1
4 x 1	5 x 2	6 x 2
7 x 3	8 x 3	9 x 1
10 x 2	11 x 4	12 x 1

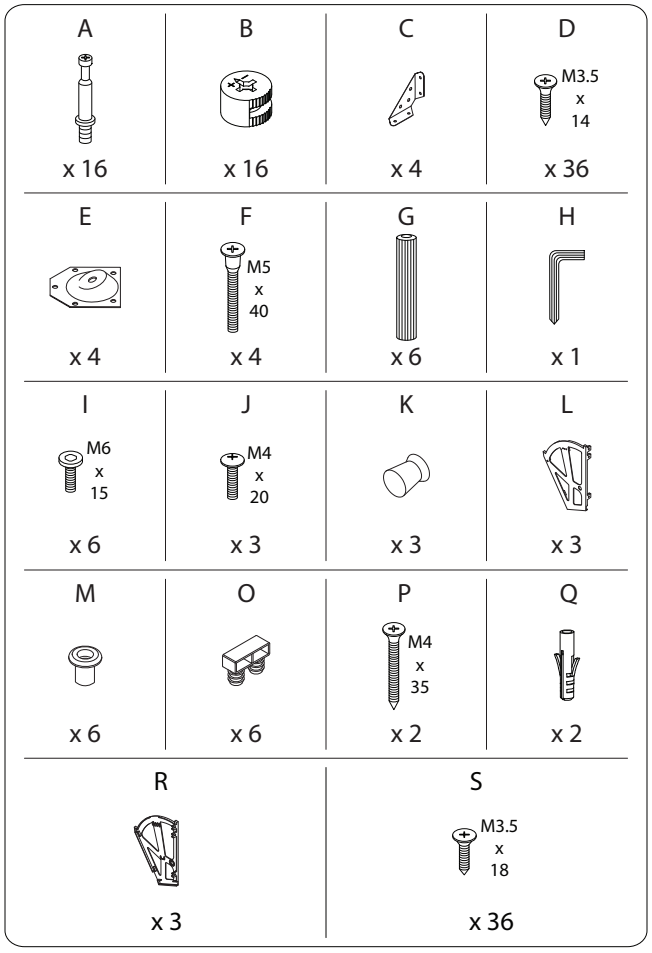
A
x 16
B
x 16
C
x 4
D
M3.5
x
14
x 36
E
x 4
F
M5
x
40
x 4
G
x 6
H
x 1
I
M6
x
15
x 6
J
M4
x
20
x 3
K
x 3
L
x 3
M
x 6
O
x 6
P
M4
x
35
x 2
Q
x 2
R
x 3
S
M3.5
x
18
x 36

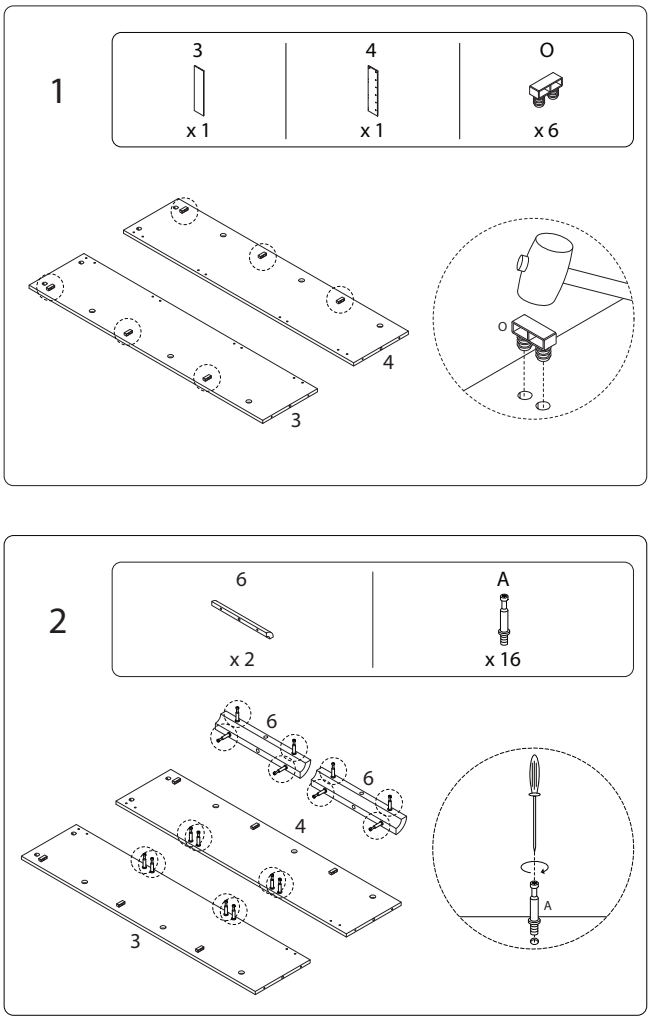
1
3
x 1
4
x 1
O
x 6
4
3
O
2
6
x 2
A
x 16
6
6
4
3
A

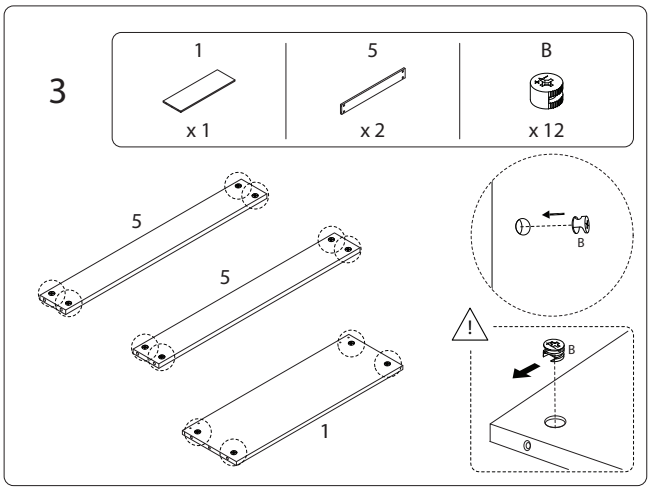
3
1
x 1
5
x 2
B
x 12
5
5
1
B
B

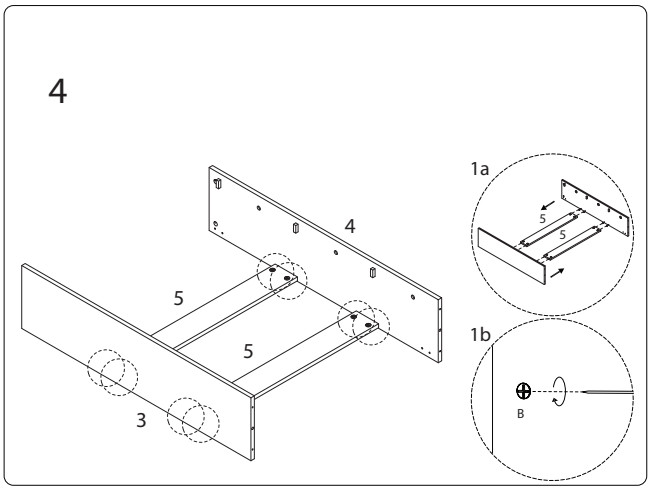
4
4
5
5
3
1a
5
5
1b
B

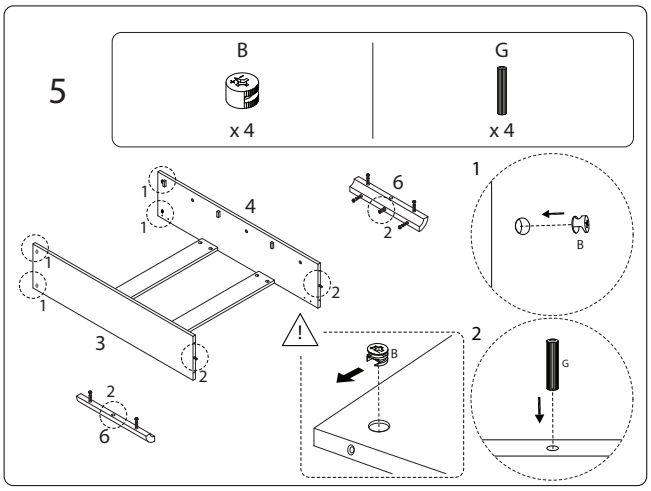
5
B
x 4
G
x 4
1
1
4
1
1
2
3
2
2
6
6
2
1
B
2
B
G

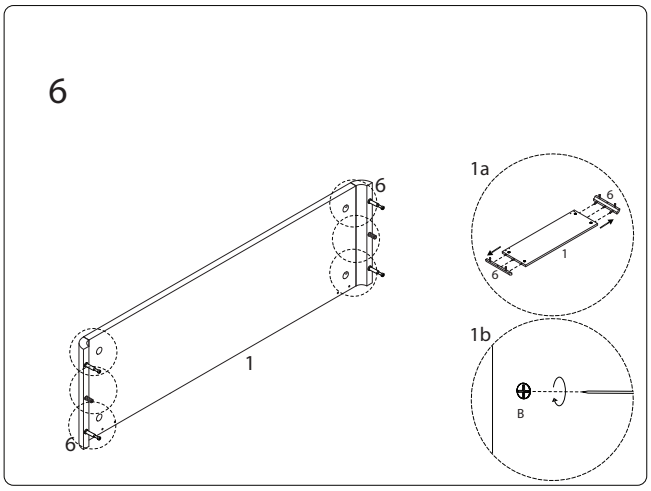
6
6
1
6
1a
6
1
6
1b
B

7

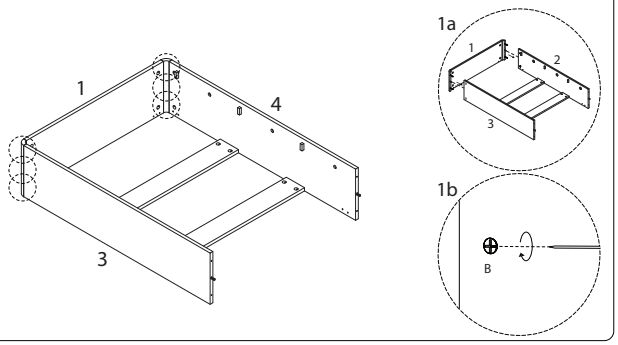

8

2
x 1

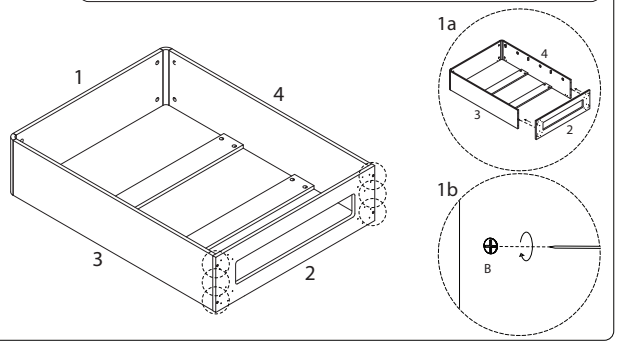

9

F	H
M5 x 40	
x 4	x 1

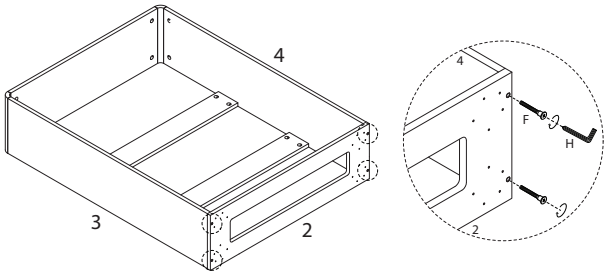

10

D	E	H
M3.5 x 14		
x 20	x 4	x 1

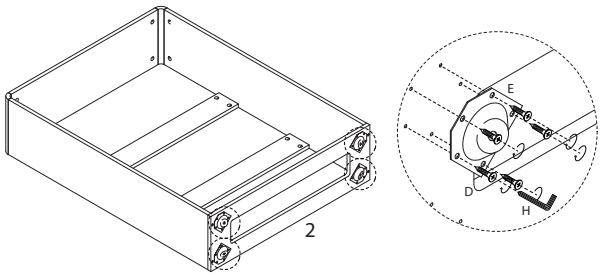

11

C	D	H
	M3.5 x 14	
x 4	x 16	x 1

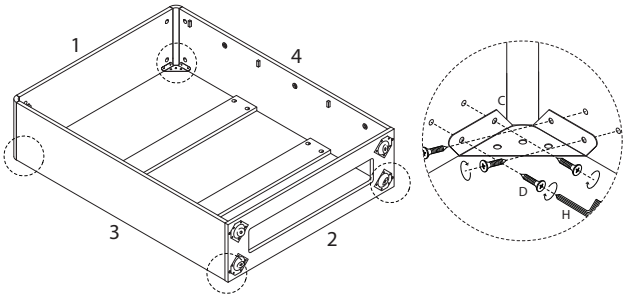

12

11
x 4

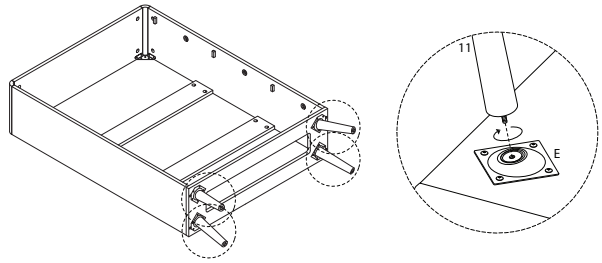

13

9	L	R	S
			M3.5 x 18
x 1	x 1	x 1	x 6

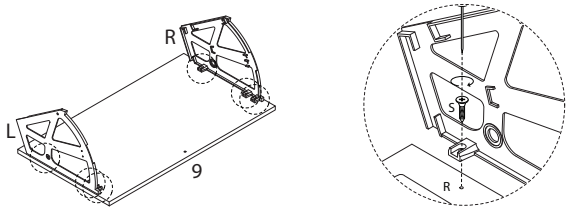

14 x 2

10	L	R	S
			M3.5 x 18
x 1	x 1	x 1	x 6

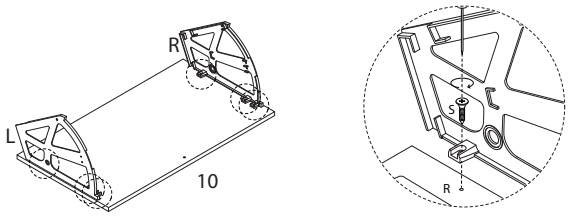

15

8	S
x 1	M3.5 x 18 x 4

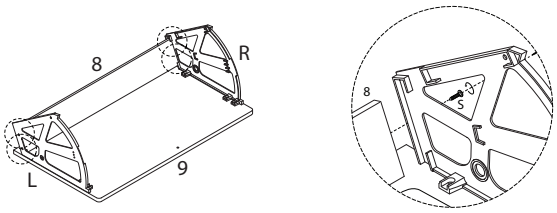

16 x 2

8	S
x 1	M3.5 x 18 x 4

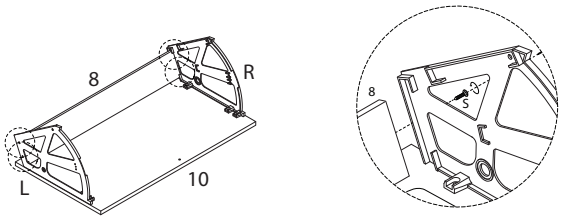

17

7	S
x 1	M3.5 x 18 x 2

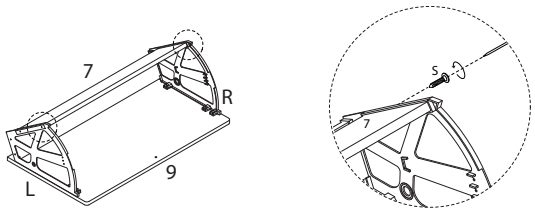

18 x 2

7	S
x 1	M3.5 x 18 x 2

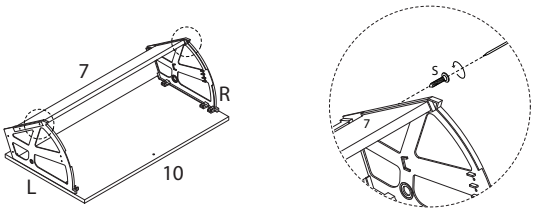

19

H	J	K
x 1	M4 x 20 x 1	x 1

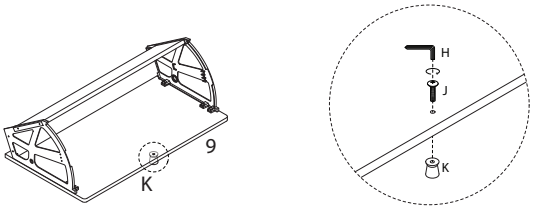

20 x 2

H	J	K
x 1	M4 x 20 x 1	x 1

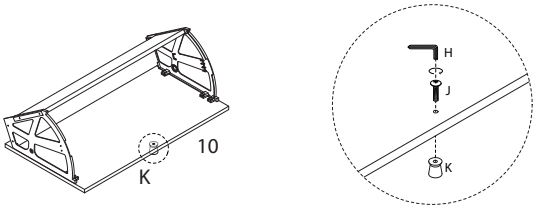

21

P	Q
M4 x 35 x 2	x 2

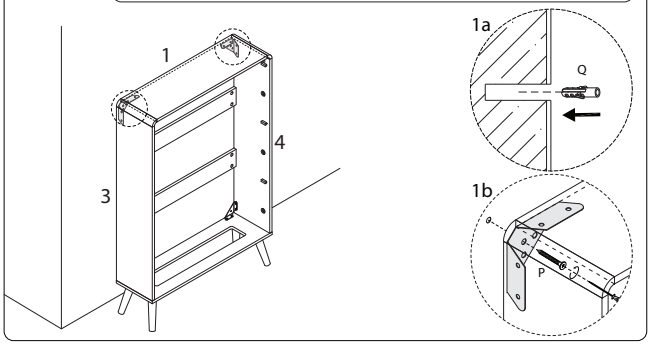

22

H	I	M
x 1	M6 x 15 x 6	x 6

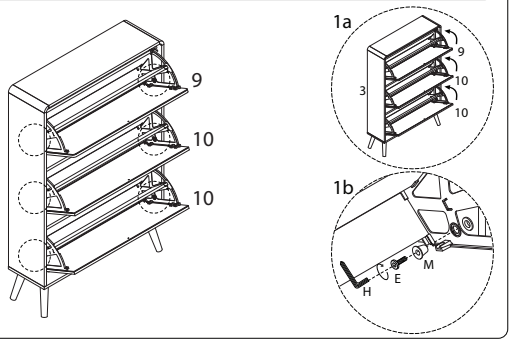

23

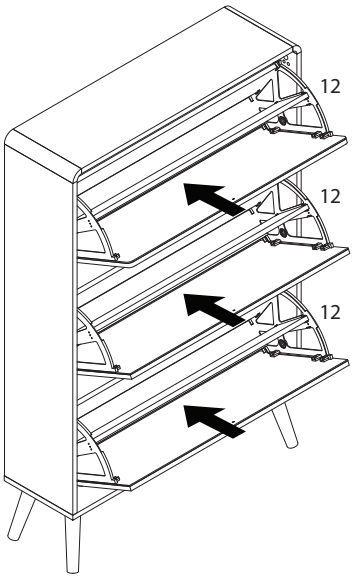

2581/MOURA/070426/