MILORA

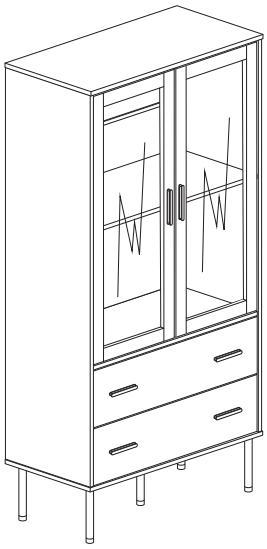

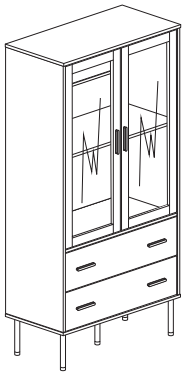

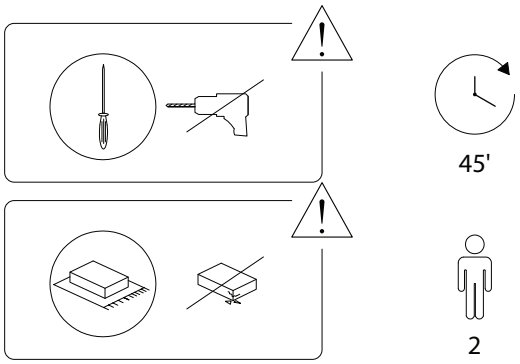

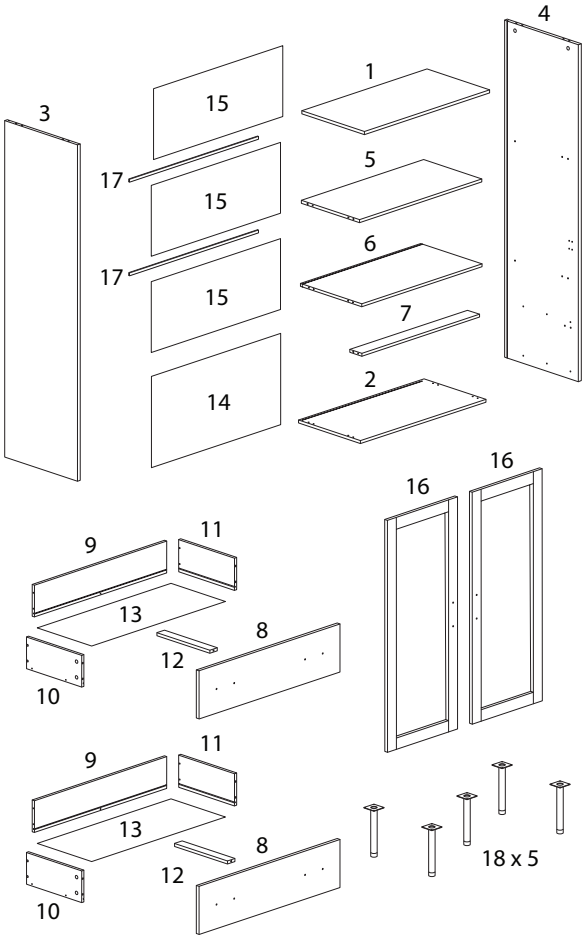

1 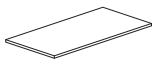 x 1	2 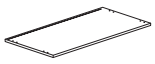 x 1	3 x 1	4 x 1
5 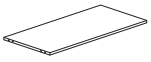 x 1	6 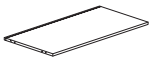 x 1	7 x 1	8 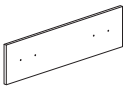 x 2
9 x 2	10 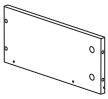 x 2	11 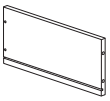 x 2	12 x 2
13 x 2	14 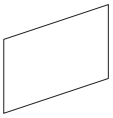 x 1	15 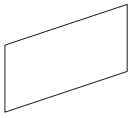 x 3	16 x 2
17 x 2	18 x 5	A x 26	B x 26

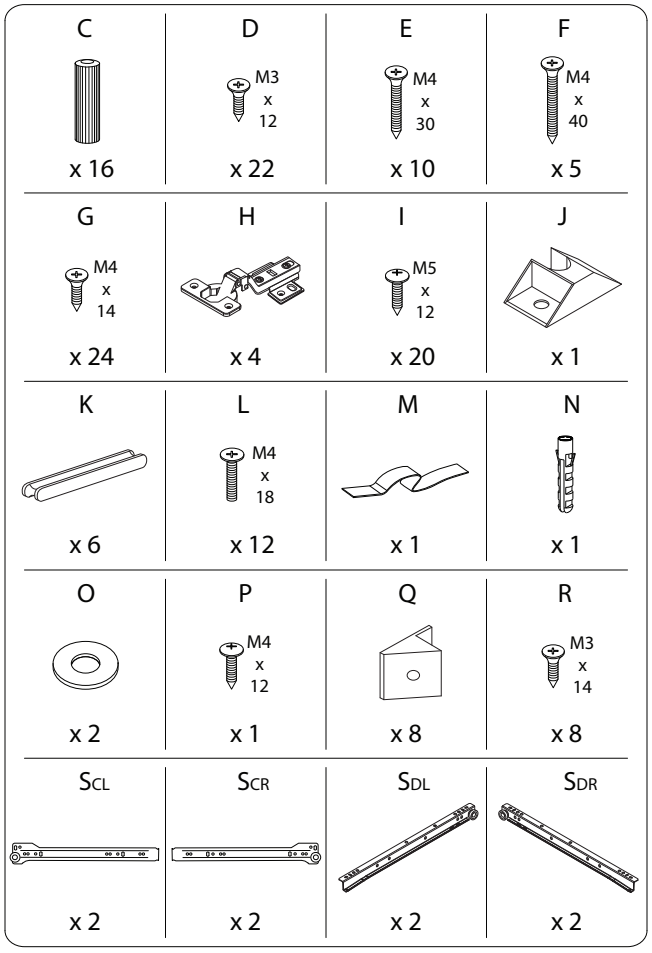
C
x 16
D
M3 x 12
x 22
E
M4 x 30
x 10
F
M4 x 40
x 5
G
M4 x 14
x 24
H
x 4
I
M5 x 12
x 20
J
x 1
K
x 6
L
M4 x 18
x 12
M
x 1
N
x 1
O
x 2
P
M4 x 12
x 1
Q
x 8
R
M3 x 14
x 8
SCL
x 2
SCR
x 2
SDL
x 2
SDR
x 2

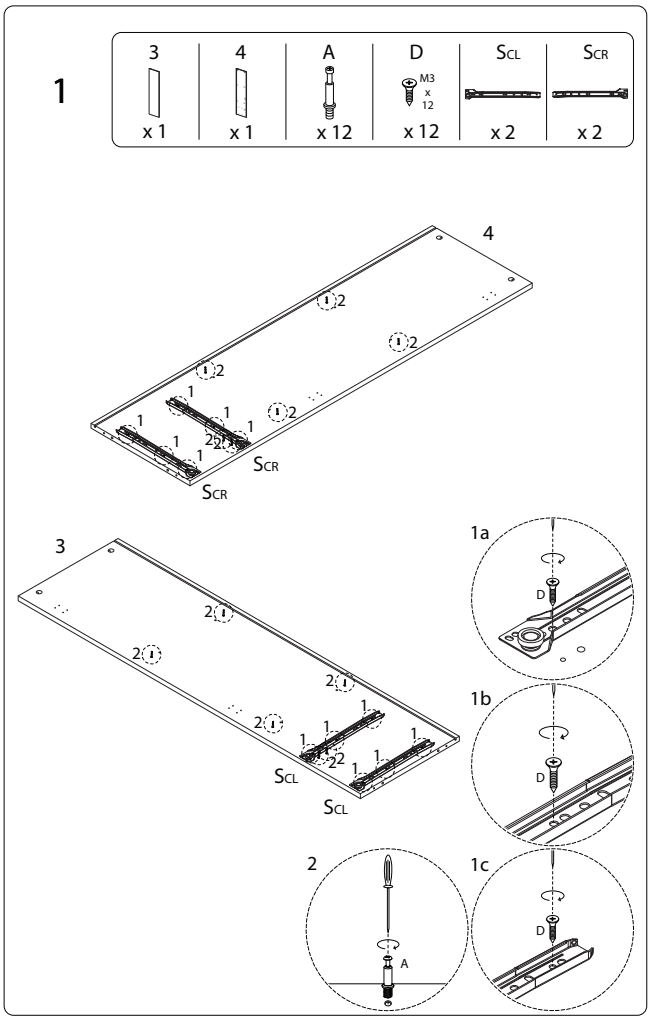
1
3 x 1
4 x 1
A x 12
D M3 x 12 x 12
SCL x 2
SCR x 2
4
SCR
SCR
3
SCL
SCL
1a
D
1b
D
2
A
1c
D

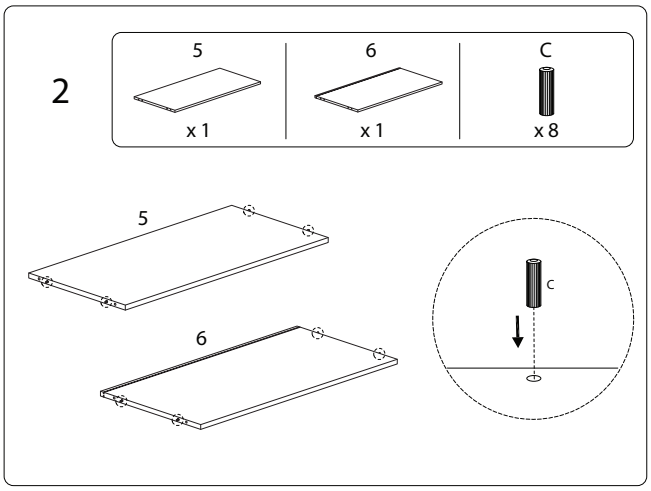
2
5 x 1
6 x 1
C x 8
5
6
C

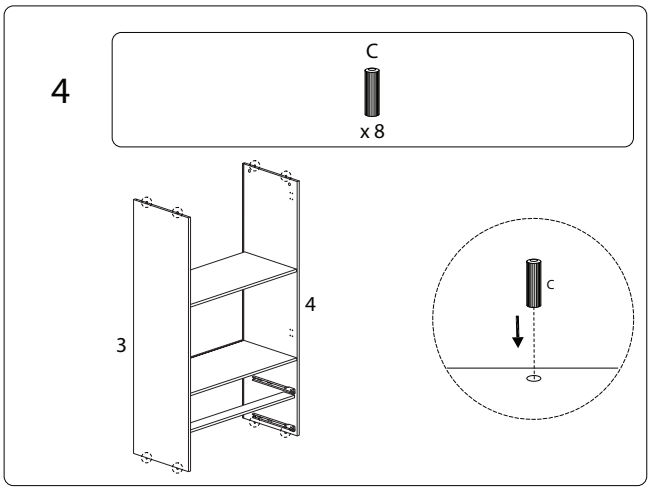
4
C x 8
3
4
C

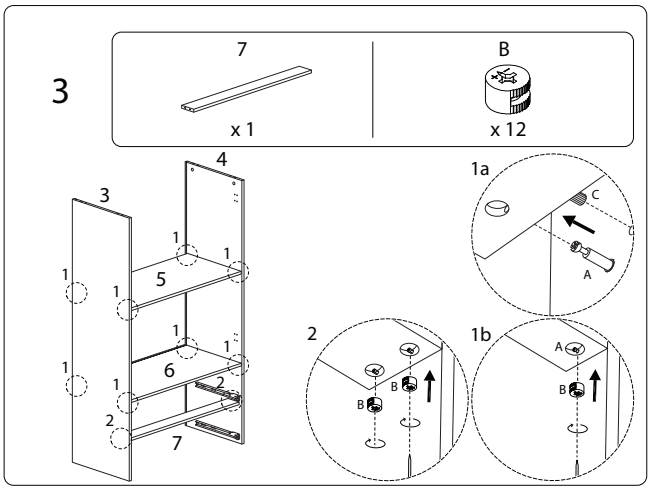
3
7 x 1
B x 12
4
3
5
6
7
1a
C
A
2
B
B
1b
A
B

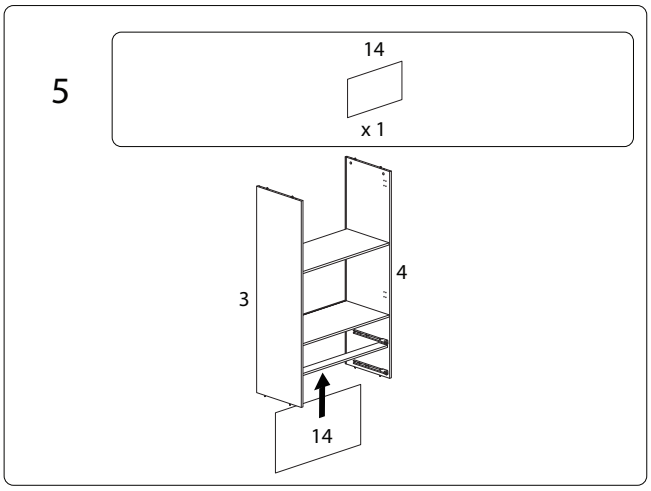
5
14 x 1
3
4
14

6

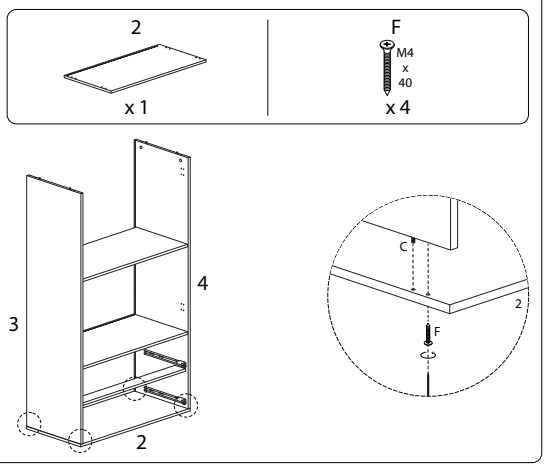

7

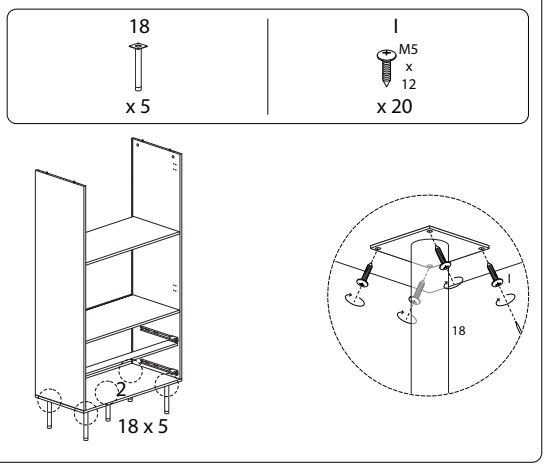

8

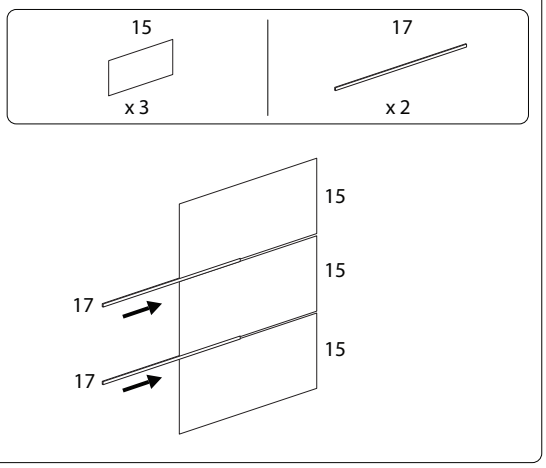

9

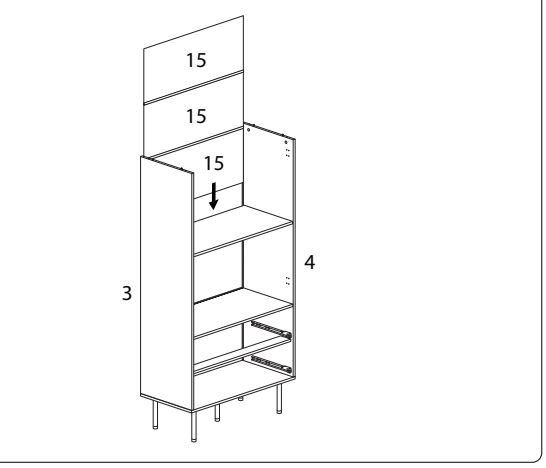

10

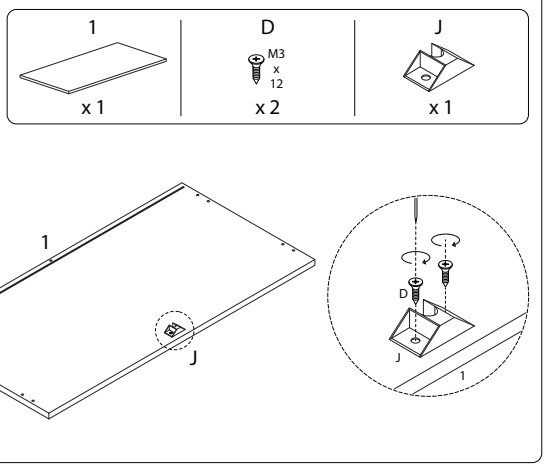

11

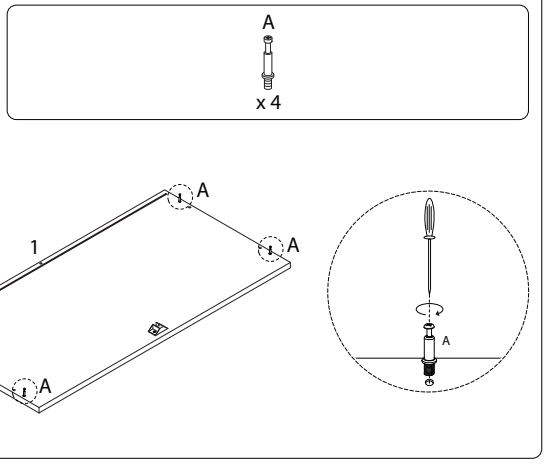

12

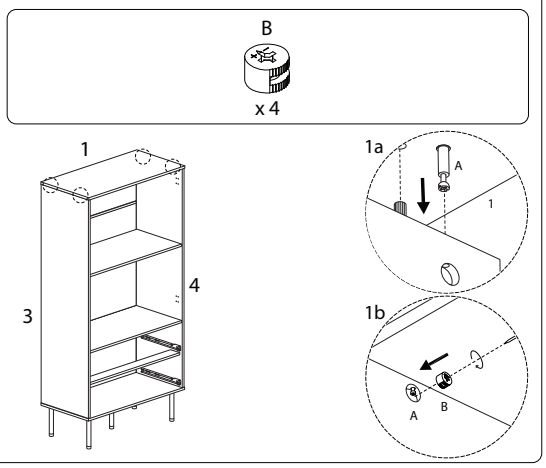

13

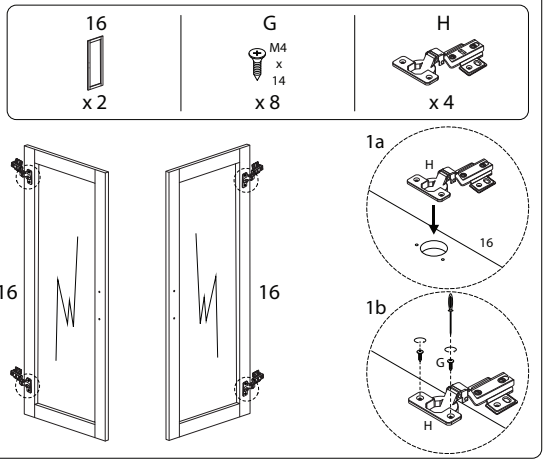

14

K	L
x 2	M4 x 18 x 4

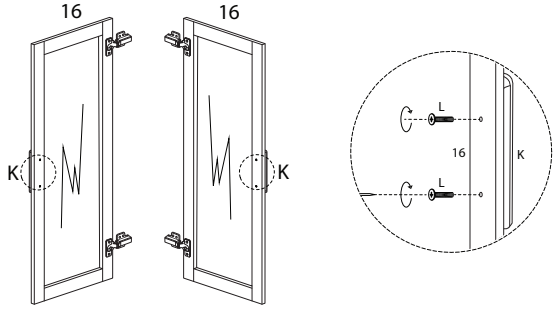

15

G
M4 x 14 x 16

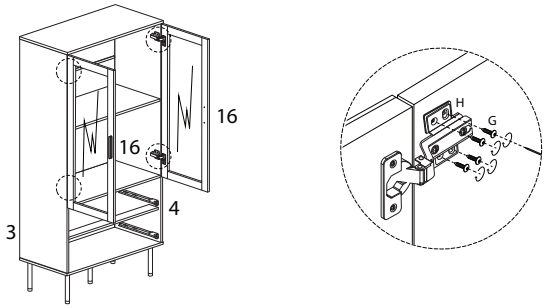

16

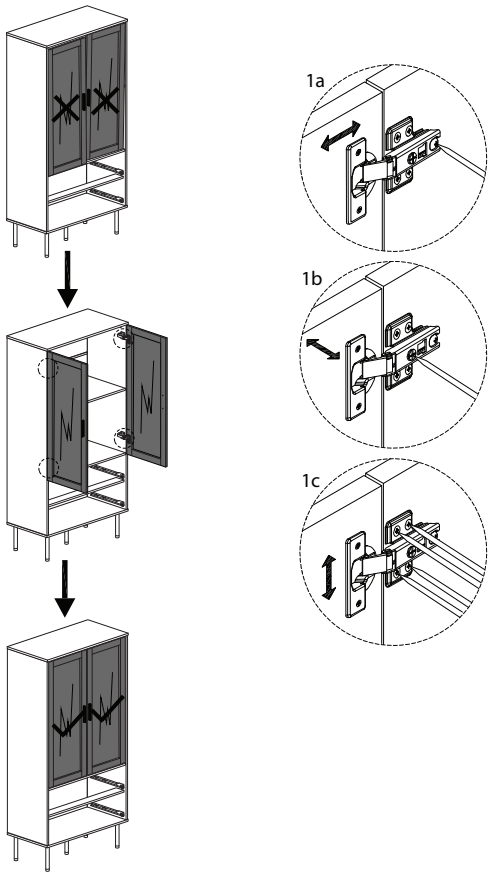

17

Q	R
x 8	M3 x 14 x 8

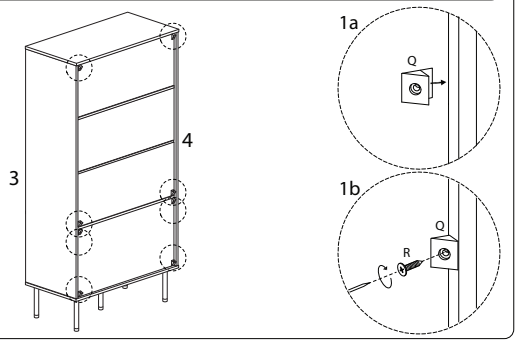

18

M	O	P
x 1	x 1	M4 x 12 x 1

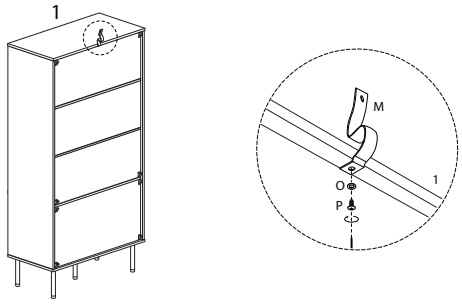

19

N
x 1

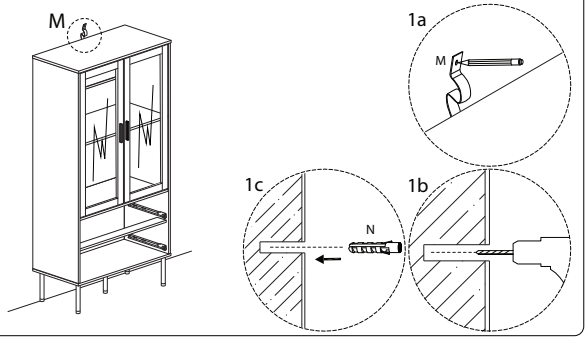

20

F	O
M4 x 40 x 1	x 1

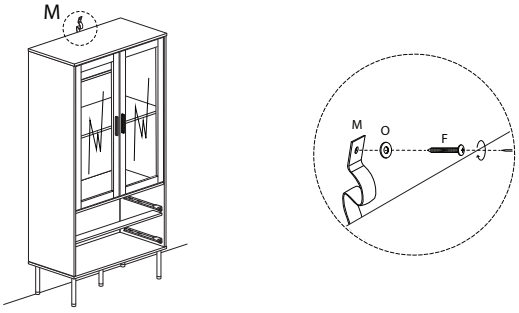

21 x 2

9	10	11	E
x 1	x 1	x 1	M4 x 30 x 4

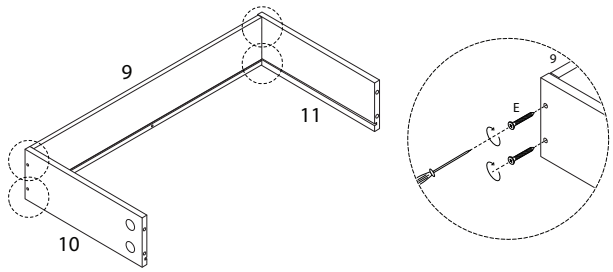

22 x 2

12	E
x 1	M4 x 30 x 1

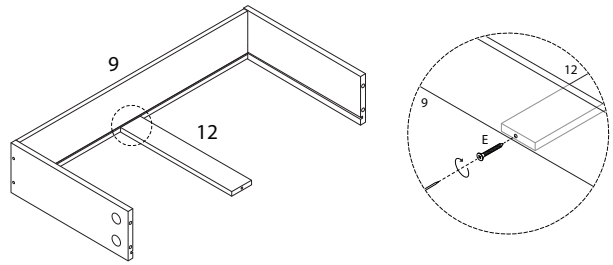

23 x 2

13
x 1

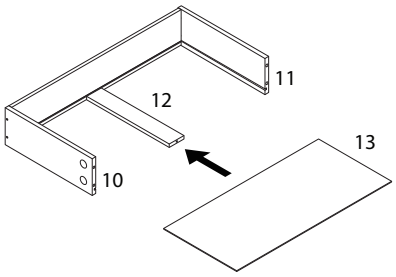

24 x 2

8	A
x 1	x 5

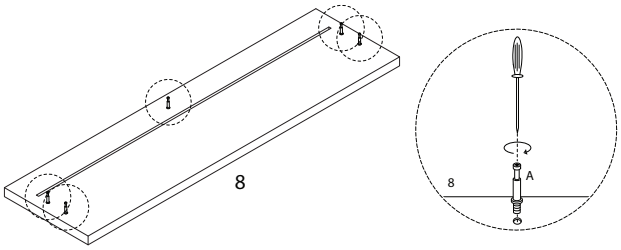

25 x 2

B
x 5

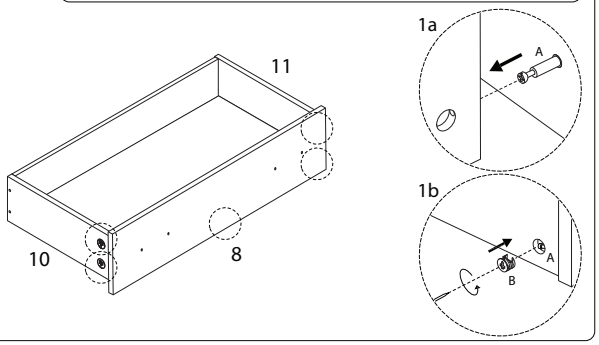

26 x 2

K	L
x 2	M4 x 18 x 4

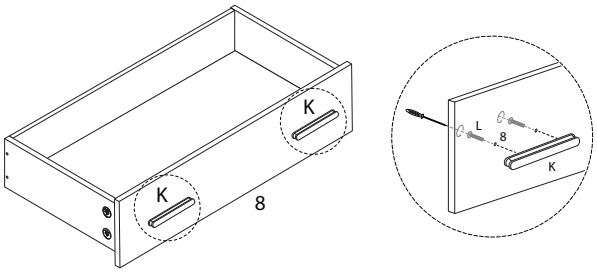

27 x 2

D	SDL	SDR
M3 x 12 x 4	x 1	x 1

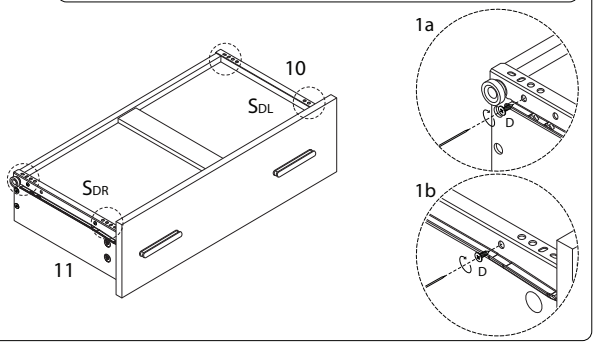

!

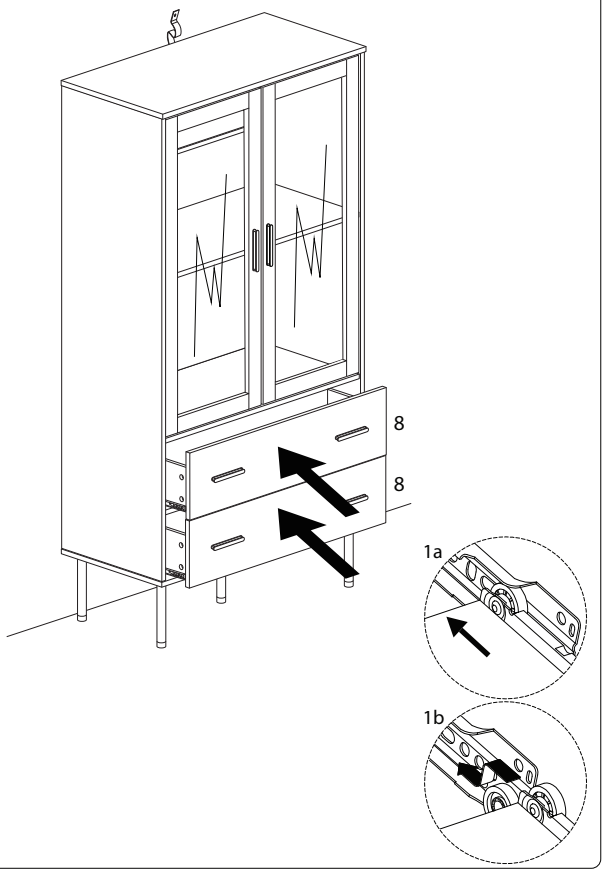

1658/MILORA/230625/