CORVALLIS



1/4

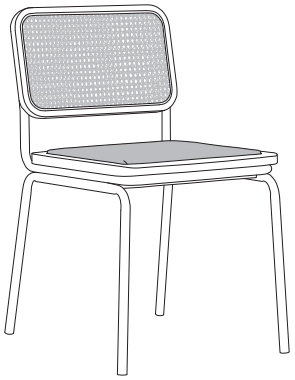

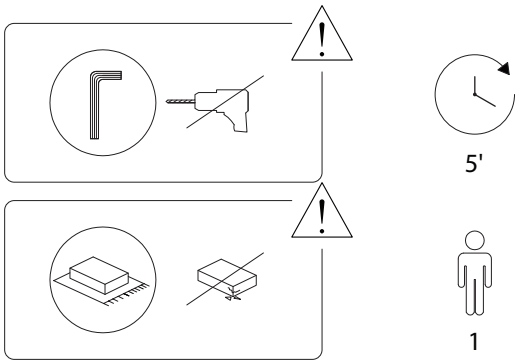

2/4

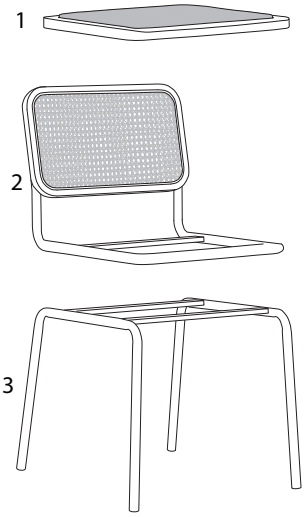

1	2	3	A	B
x 1	x 1	x 1	x 4	x 1

3/4

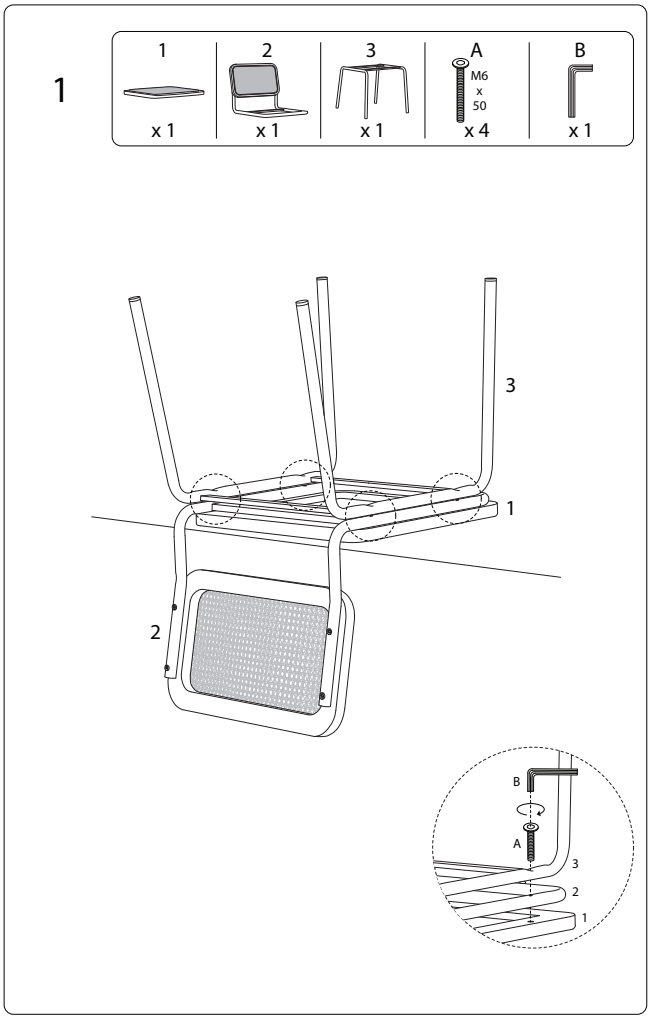

4/4