ELISTON

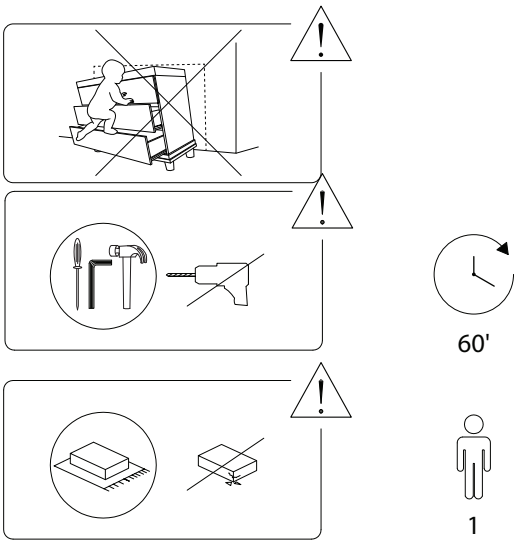
60'
1

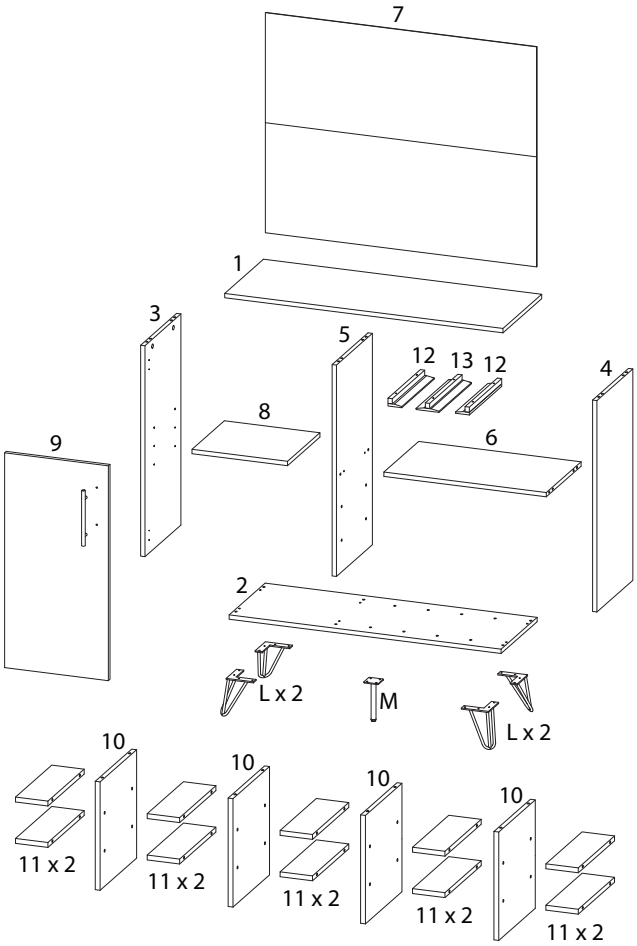
7
1
3
5
12
13
12
4
8
6
9
2
L x 2
M
L x 2
10
10
10
10
11 x 2
11 x 2
11 x 2
11 x 2
11 x 2

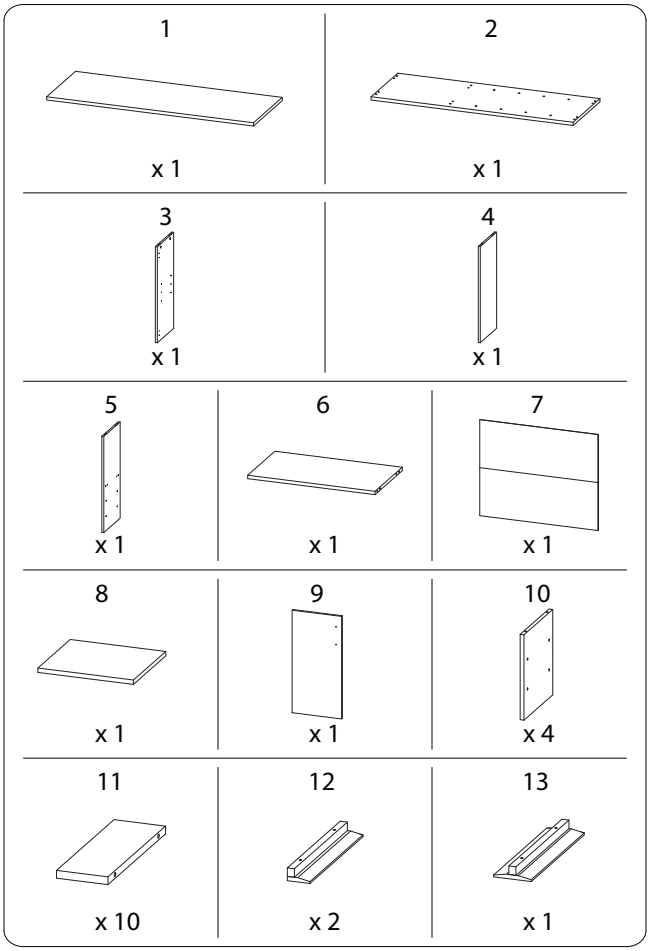
1
x 1
2
x 1
3
x 1
4
x 1
5
x 1
6
x 1
7
x 1
8
x 1
9
x 1
10
x 4
11
x 10
12
x 2
13
x 1

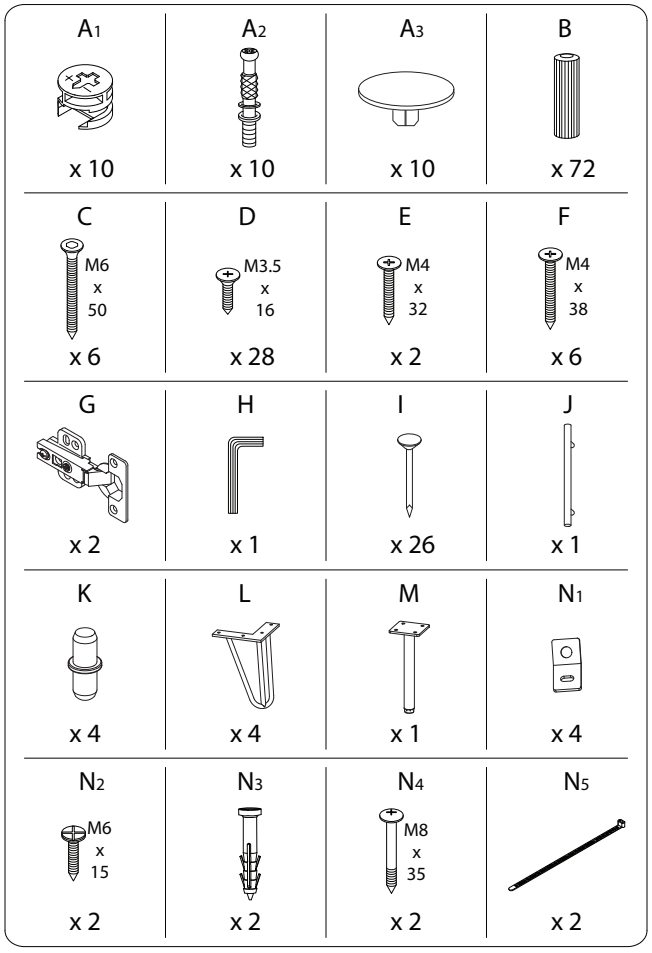
A1
x 10
A2
x 10
A3
x 10
B
x 72
C
M6 x 50
x 6
D
M3.5 x 16
x 28
E
M4 x 32
x 2
F
M4 x 38
x 6
G
x 2
H
x 1
I
x 26
J
x 1
K
x 4
L
x 4
M
x 1
N1
x 4
N2
M6 x 15
x 2
N3
x 2
N4
M8 x 35
x 2
N5
x 2

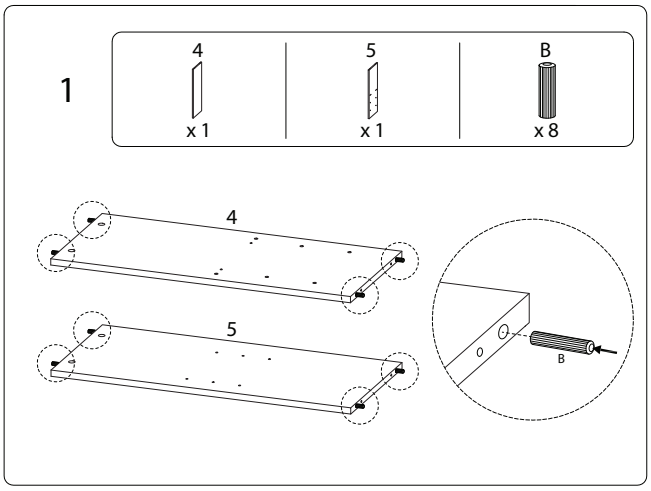
1
4
x 1
5
x 1
B
x 8
4
5
B

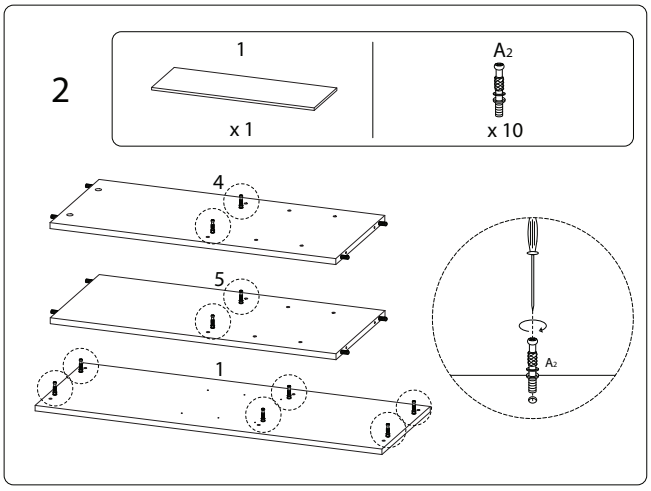
2
1
x 1
A2
x 10
4
5
1
A2

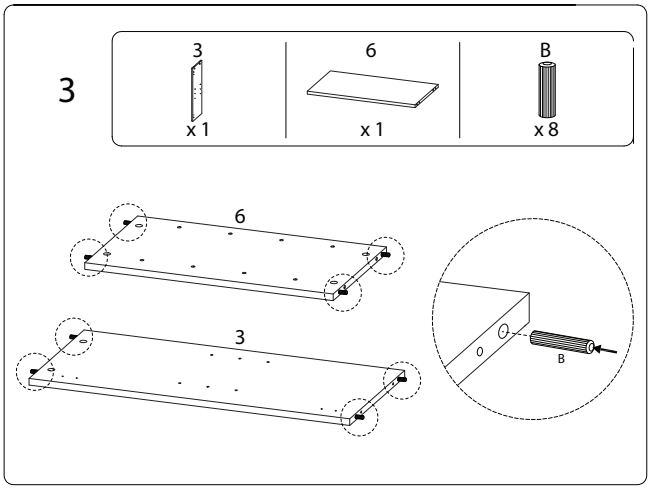
3
3
x 1
6
x 1
B
x 8
6
3
B

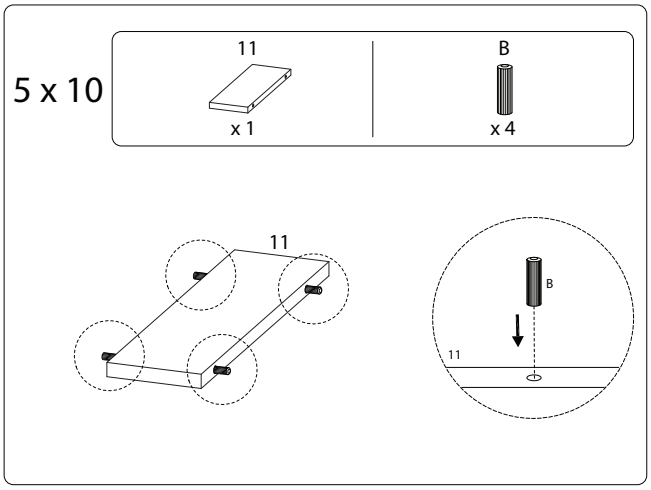
5 x 10
11
x 1
B
x 4
11
B
11

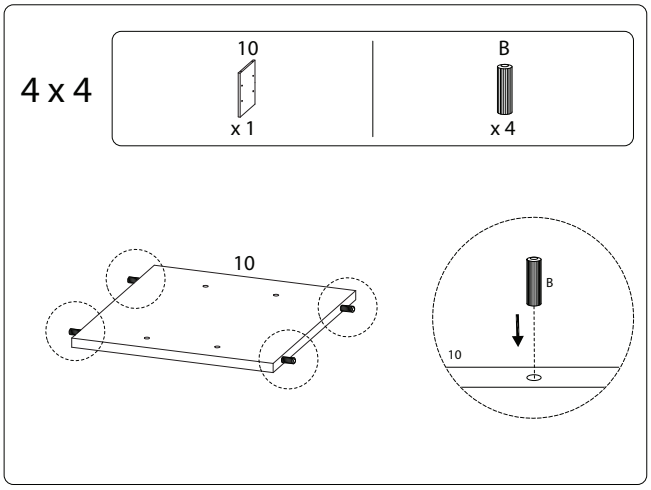
4 x 4
10
x 1
B
x 4
10
B
10

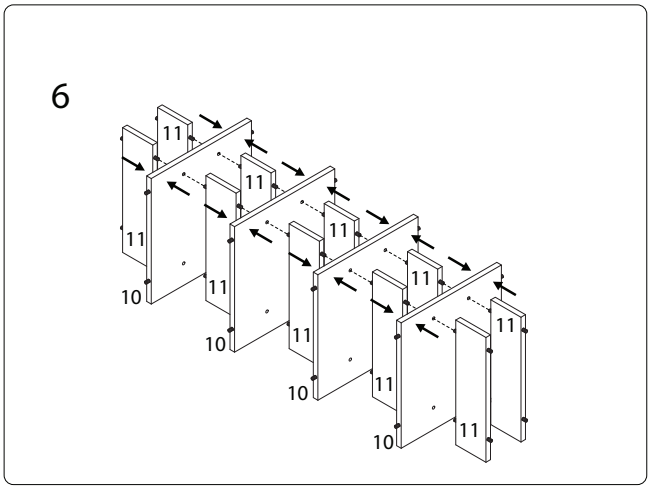
6
11
10

7

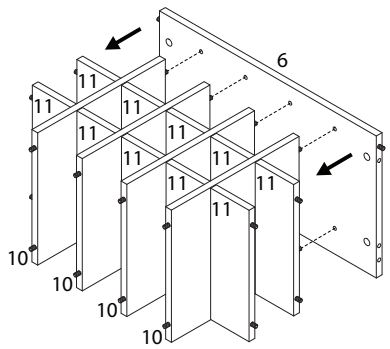

8

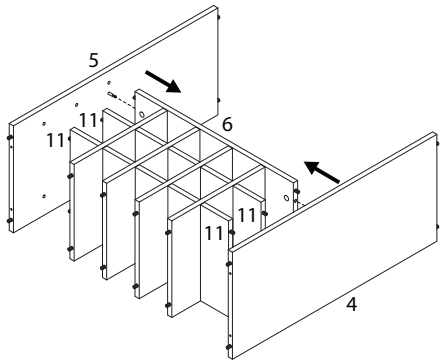

9

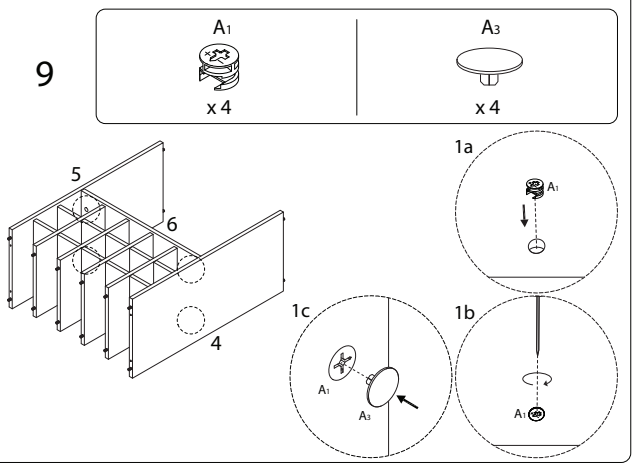

10

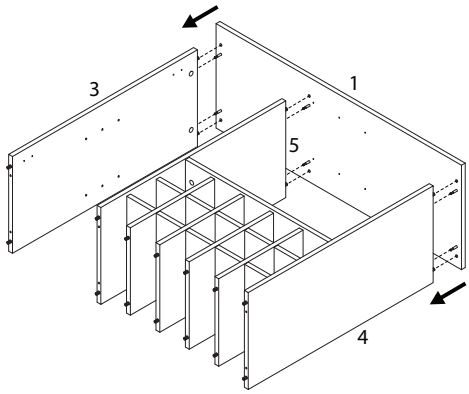

11

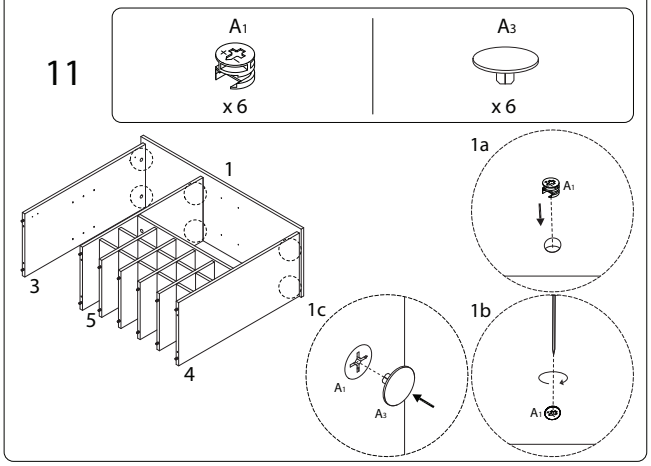

12

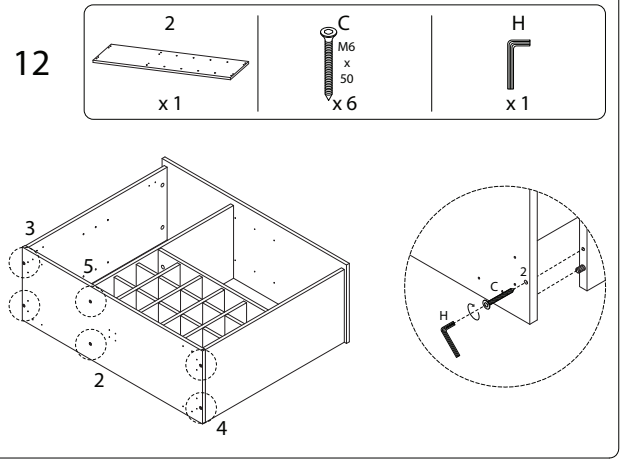

13

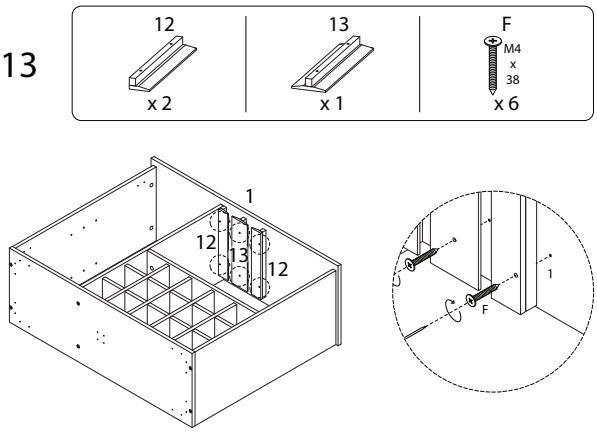

14

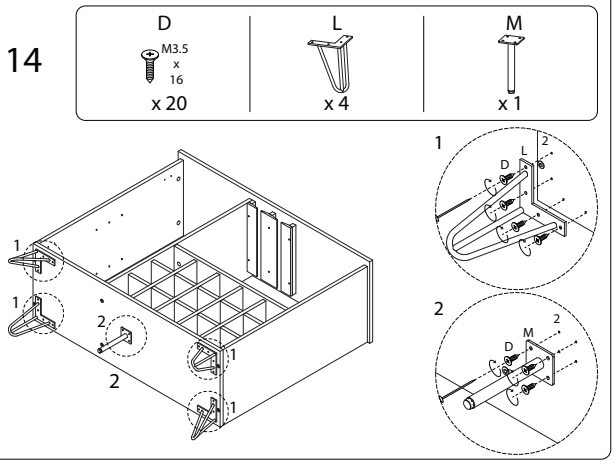

15

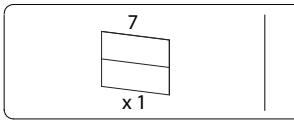

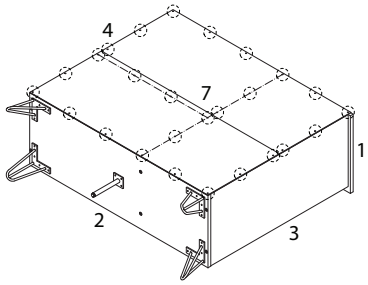

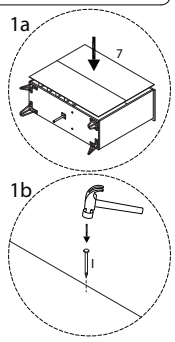

16

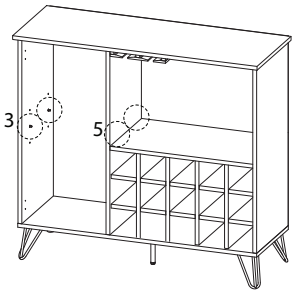

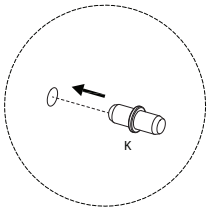

17

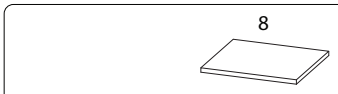

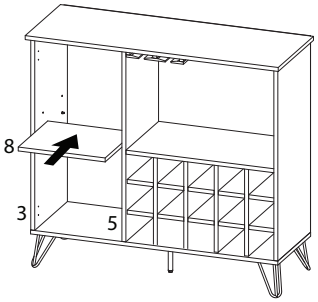

18

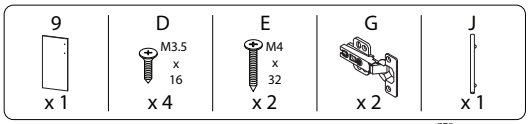

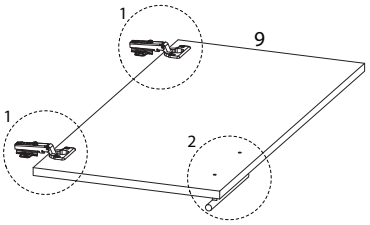

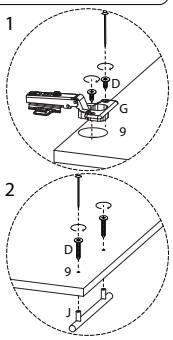

19

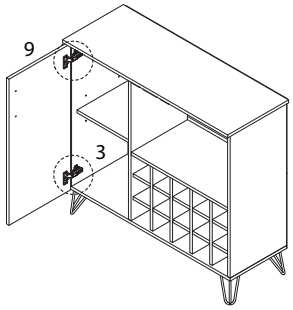

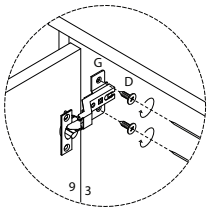

20

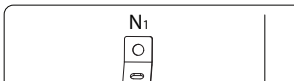

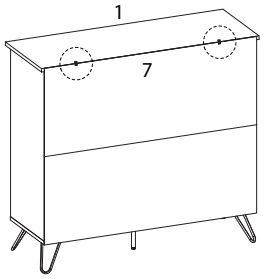

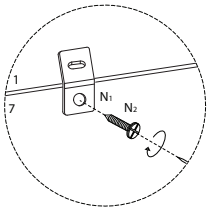

21

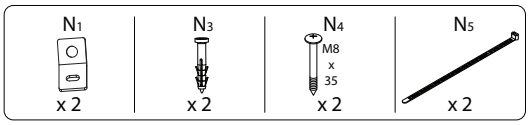

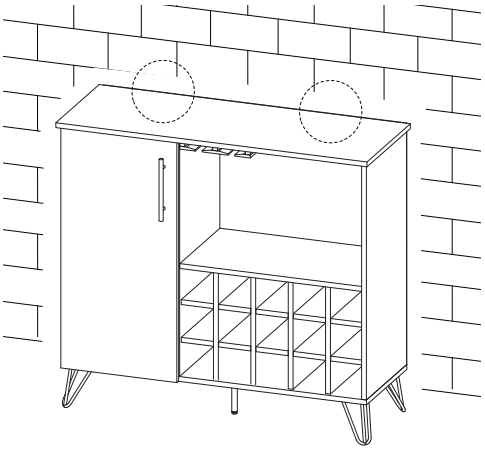

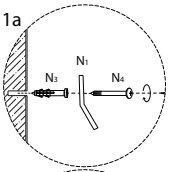

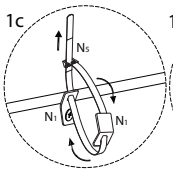

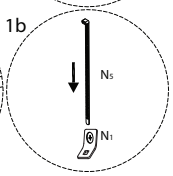

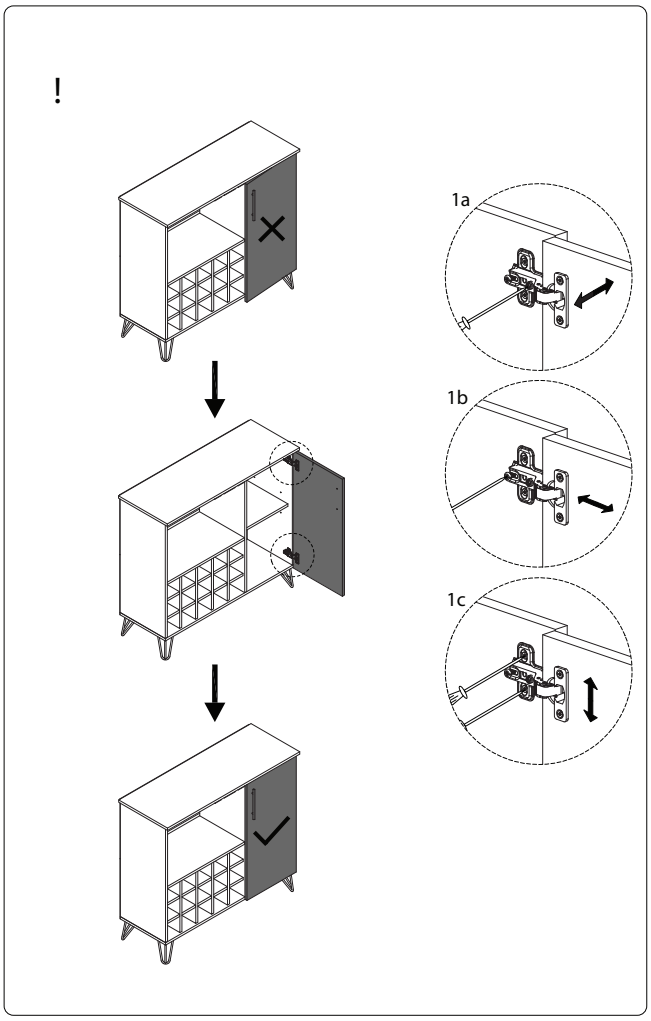

920/ELISTON/030525/