MILORA

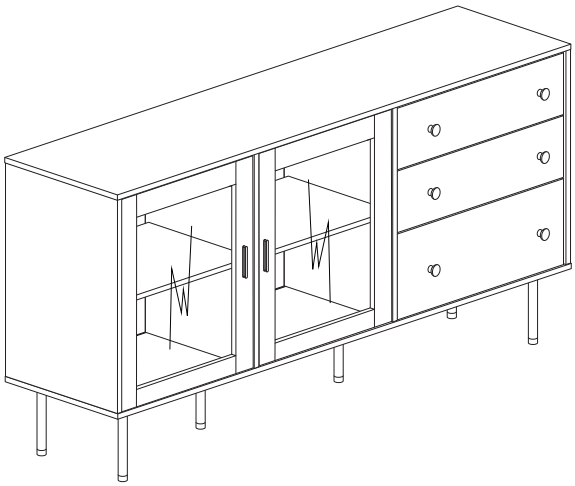

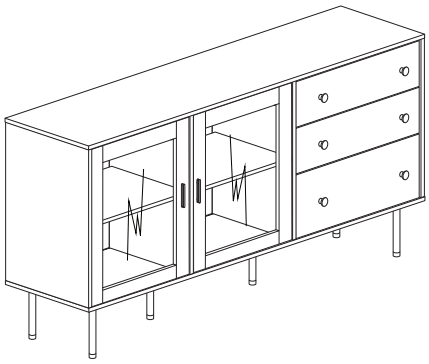

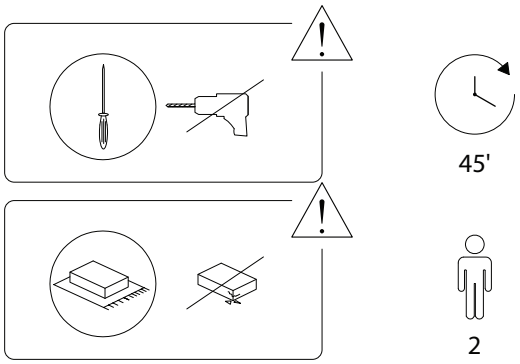
45'
2

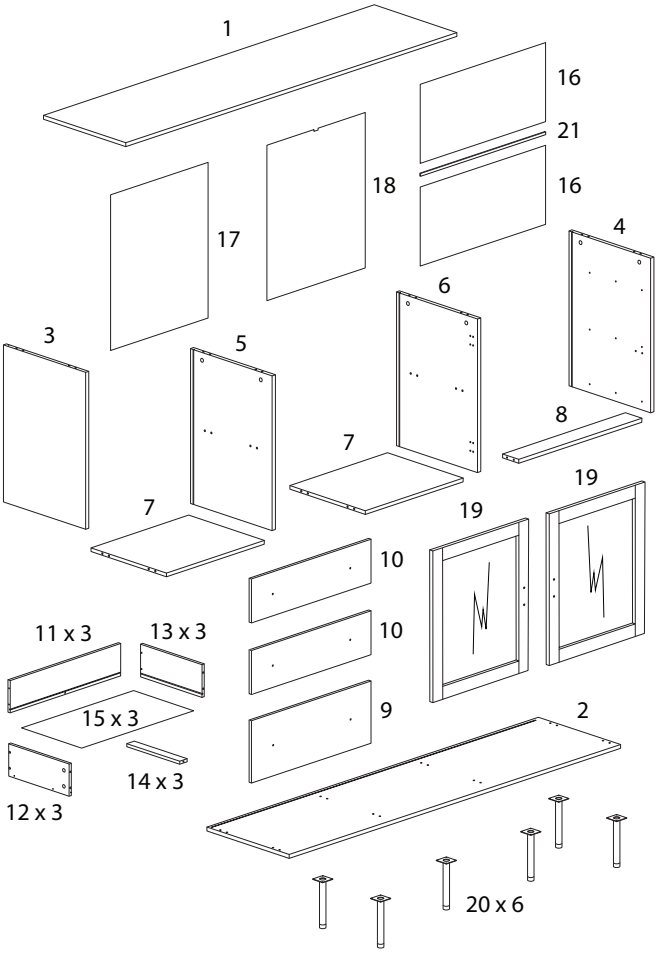
1
16
21
16
18
17
4
6
3
5
8
7
19
7
19
10
11 x 3
13 x 3
10
15 x 3
9
2
14 x 3
12 x 3
20 x 6

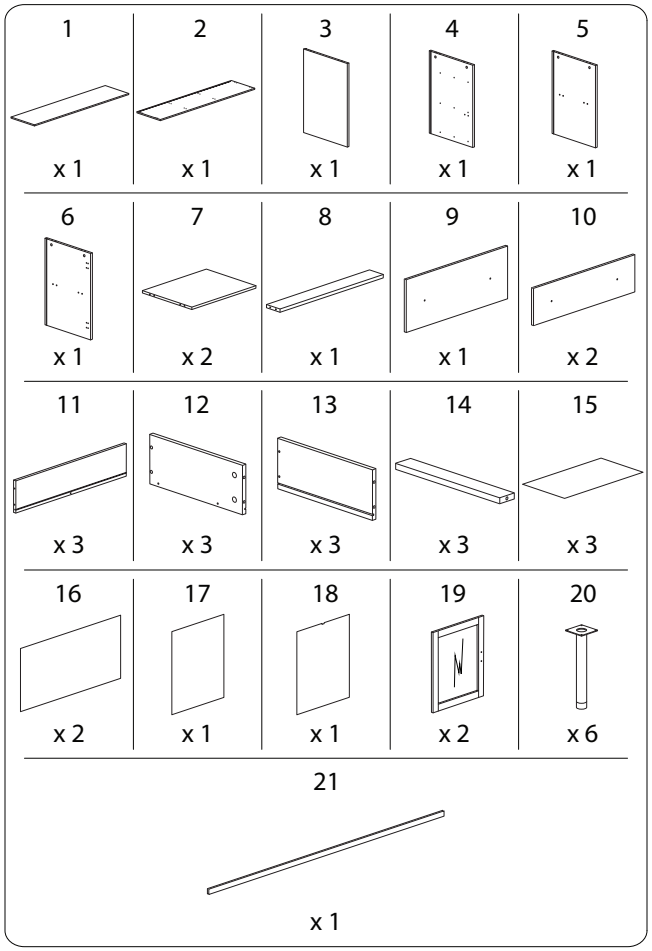
1 x 1
2 x 1
3 x 1
4 x 1
5 x 1
6 x 1
7 x 2
8 x 1
9 x 1
10 x 2
11 x 3
12 x 3
13 x 3
14 x 3
15 x 3
16 x 2
17 x 1
18 x 1
19 x 2
20 x 6
21 x 1

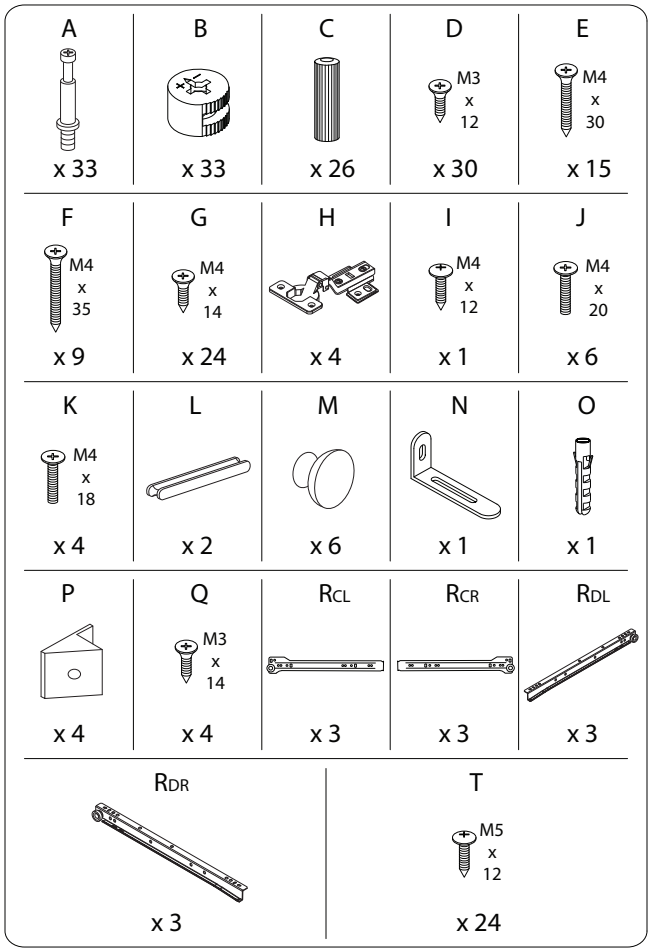
A x 33
B x 33
C x 26
D M3 x 12 x 30
E M4 x 30 x 15
F M4 x 35 x 9
G M4 x 14 x 24
H x 4
I M4 x 12 x 1
J M4 x 20 x 6
K M4 x 18 x 4
L x 2
M x 6
N x 1
O x 1
P x 4
Q M3 x 14 x 4
RCL x 3
RCR x 3
RDL x 3
RDR x 3
T M5 x 12 x 24

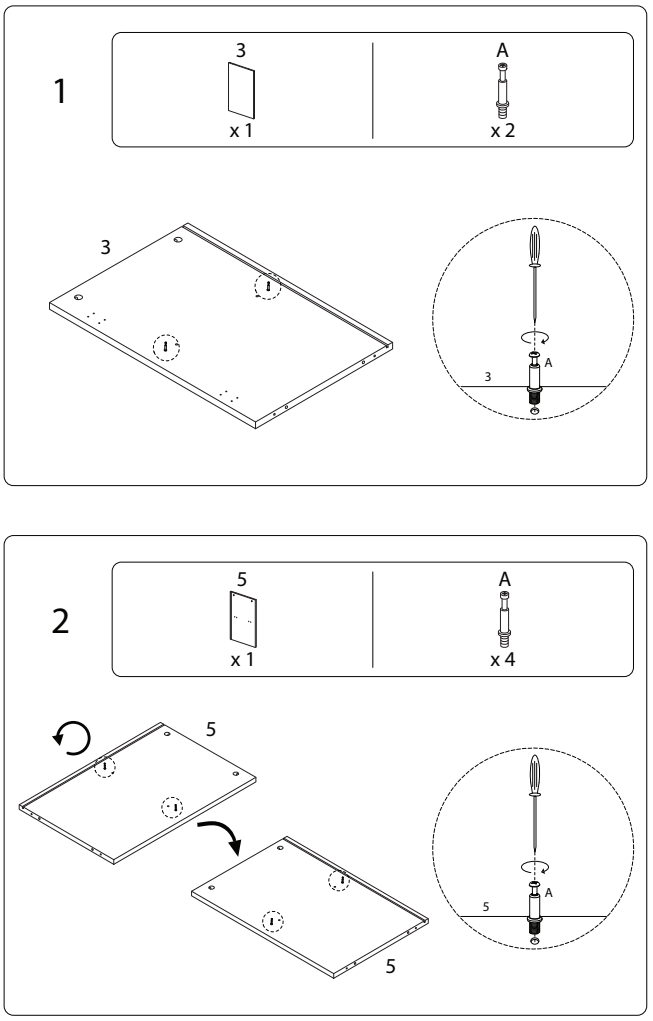
1
3 x 1
A x 2
3
A
2
5 x 1
A x 4
5
A
5

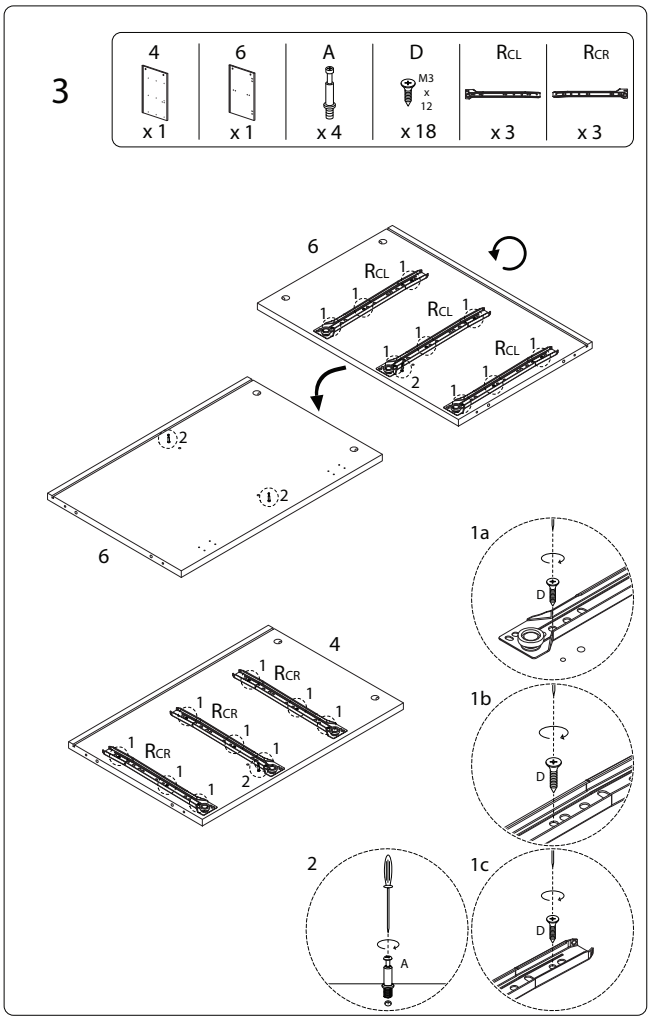
3
4 x 1
6 x 1
A x 4
D M3 x 12 x 18
RCL x 3
RCR x 3
6
RCL
2
6
4
RCR
1a
D
1b
D
2
A
1c
D

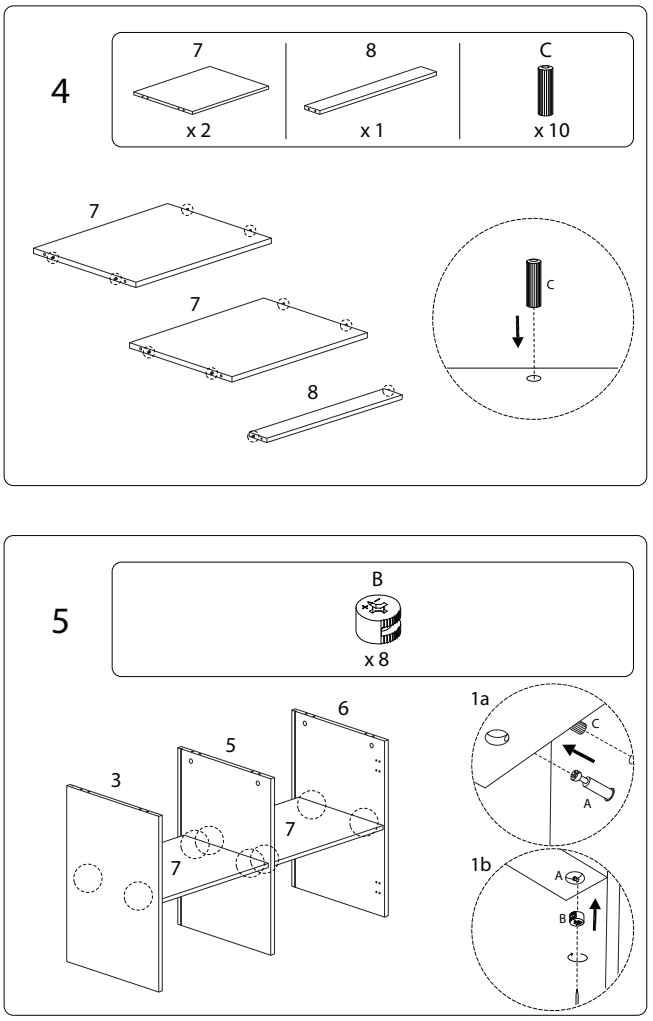
4
7 x 2
8 x 1
C x 10
7
7
8
C
5
B x 8
3
5
6
7
7
1a
C
A
1b
A
B

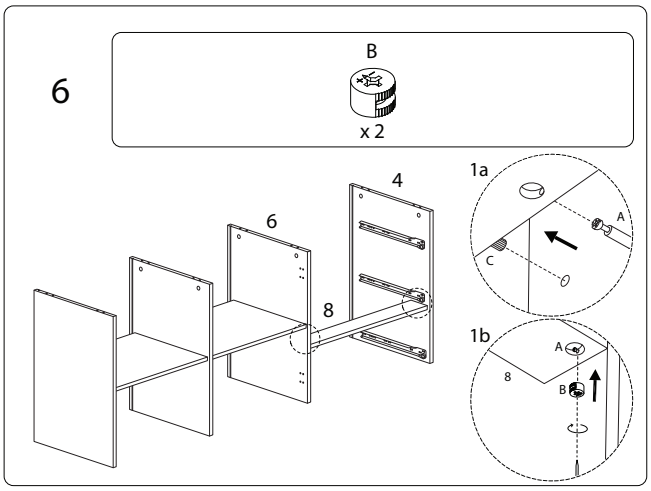
6
B
x 2
4
6
8
1a
A
C
1b
A
8
B

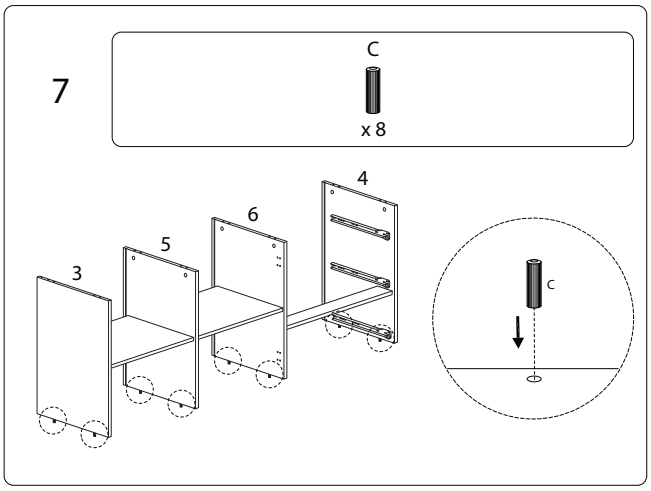
7
C
x 8
4
6
5
3
C

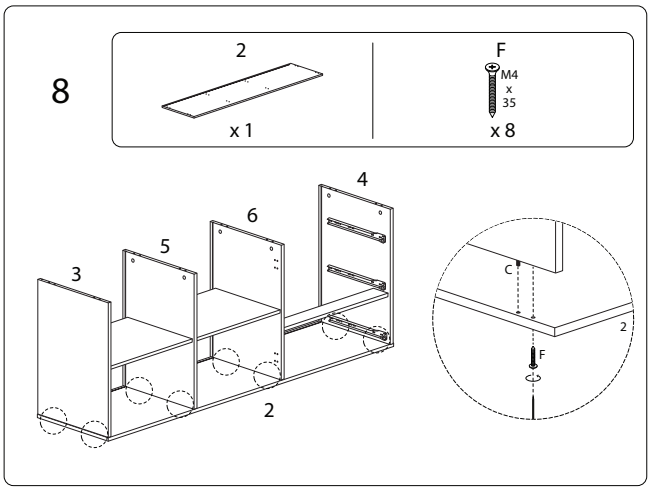
8
2
x 1
F
M4
x
35
x 8
4
6
5
3
2
C
2
F

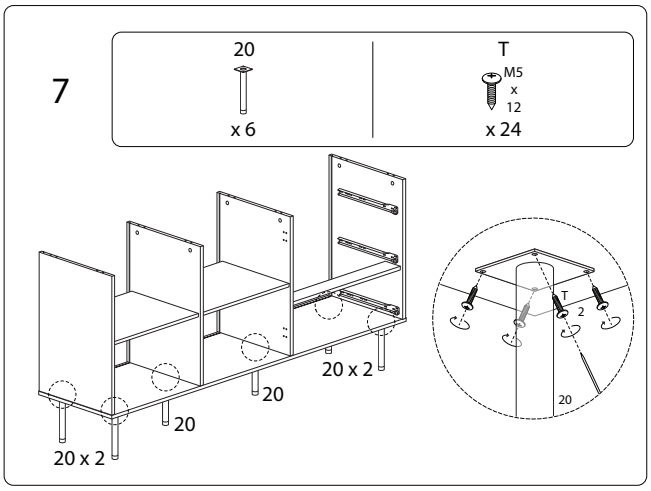
7
20
x 6
T
M5
x
12
x 24
20 x 2
20
20
20 x 2
T
2
20

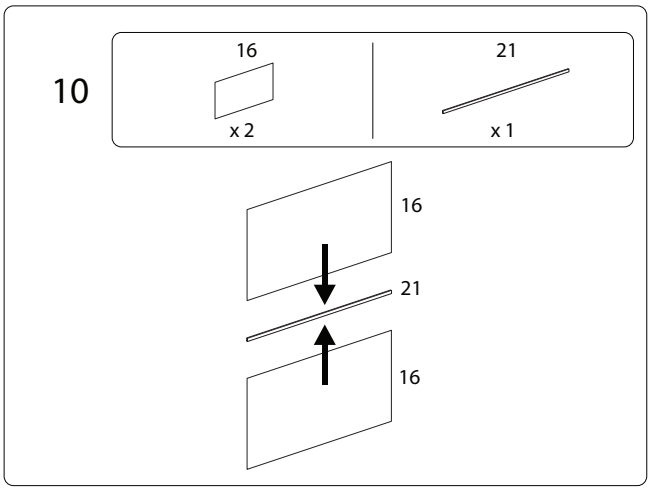
10
16
x 2
21
x 1
16
21
16

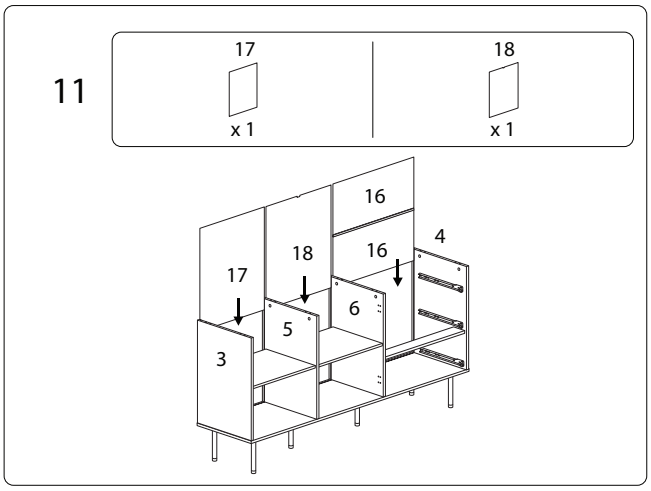
11
17
x 1
18
x 1
16
4
18
16
17
6
5
3

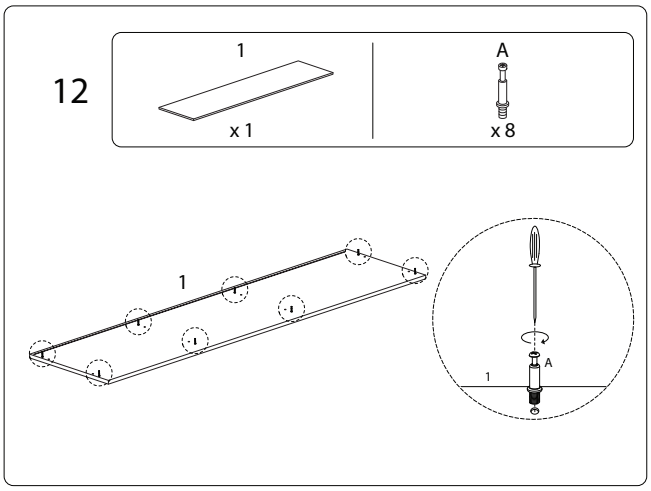
12
1
x 1
A
x 8
1
A
1

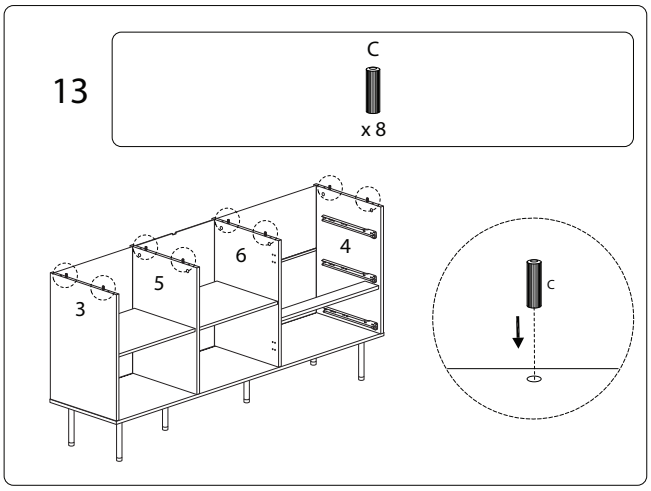
13
C
x 8
6
4
5
3
C

14

B

x 8

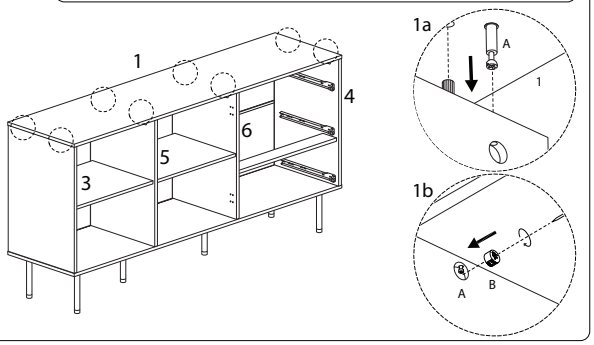

14

K

M4 x 18

x 4

L

x 2

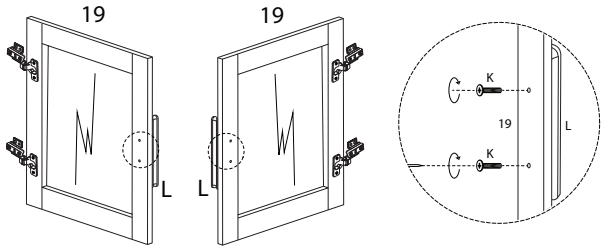

15

19

x 2

G

M4 x 14

x 8

H

x 4

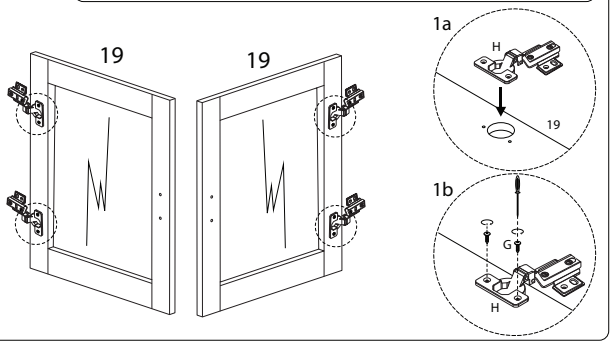

15

G

M4 x 14

x 16

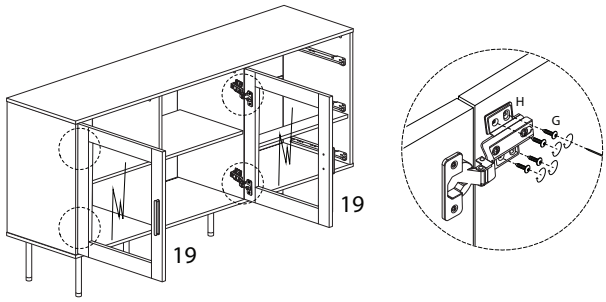

16

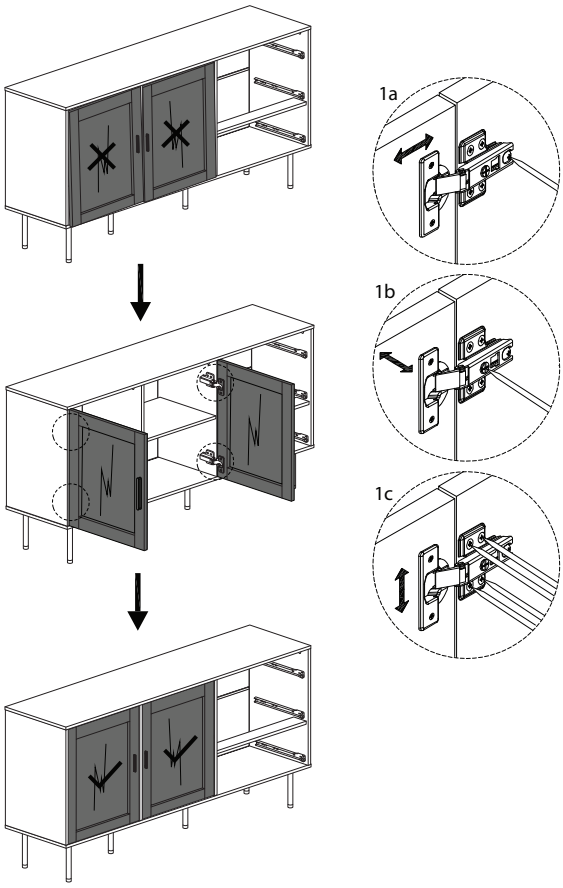

17

P

x 4

Q

M3 x 14

x 4

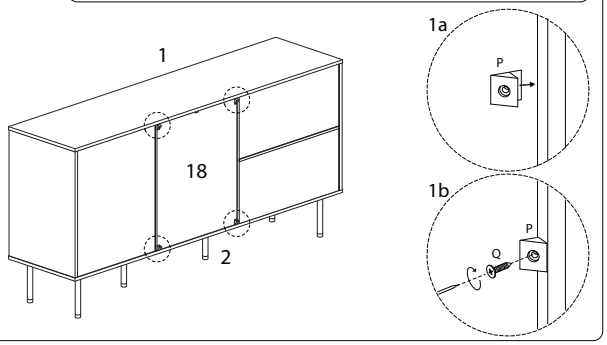

18

N

x 1

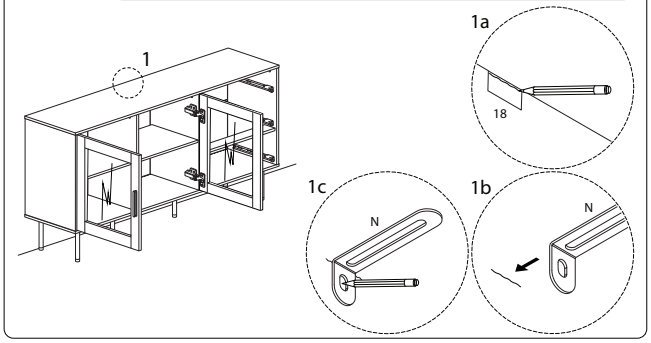

19

F	O
M4 x 35	
x 1	x 1

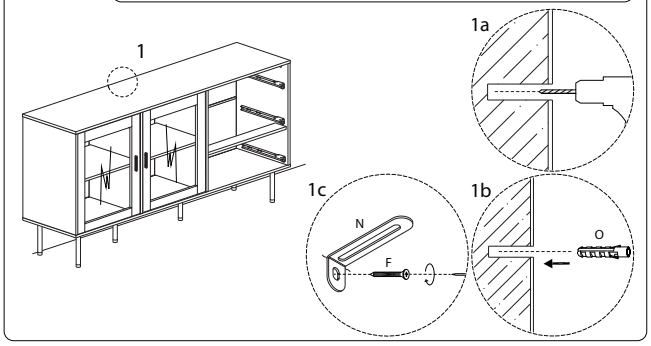

20

I
M4 x 14
x 1

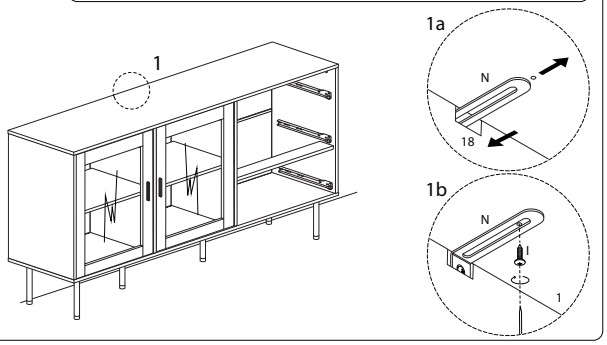

21 x 3

11	12	13	E
			M4 x 30
x 1	x 1	x 1	x 4

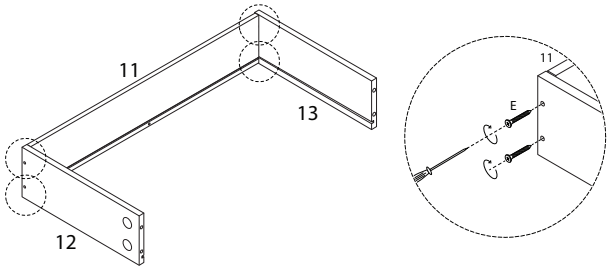

22 x 3

14	E
	M4 x 30
x 1	x 1

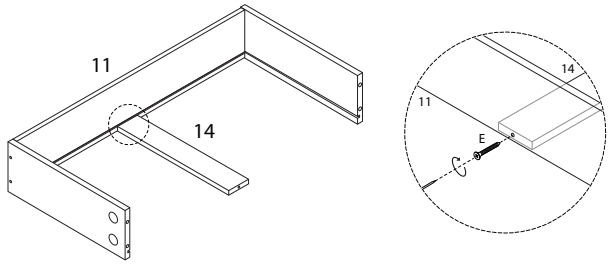

23 x 3

15
x 1

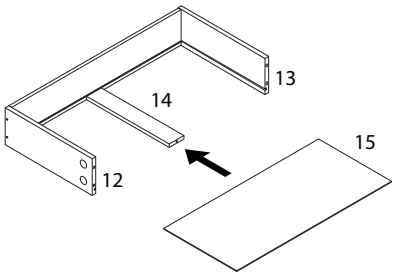

24

9	10	A
x 1	x 2	x 15

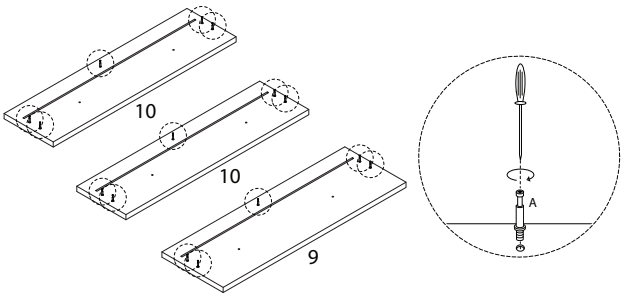

25

B
x 15

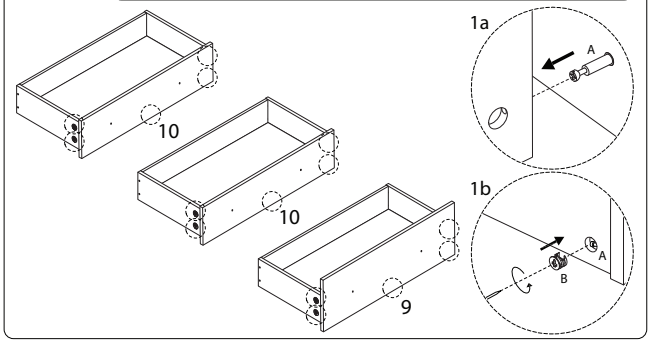

26

M	J
	M4 x 20
x 6	x 6

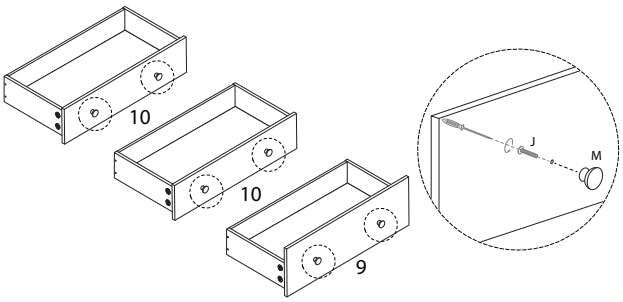

27

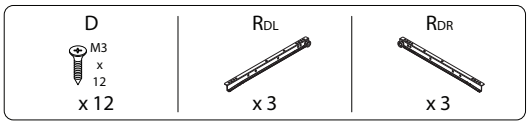

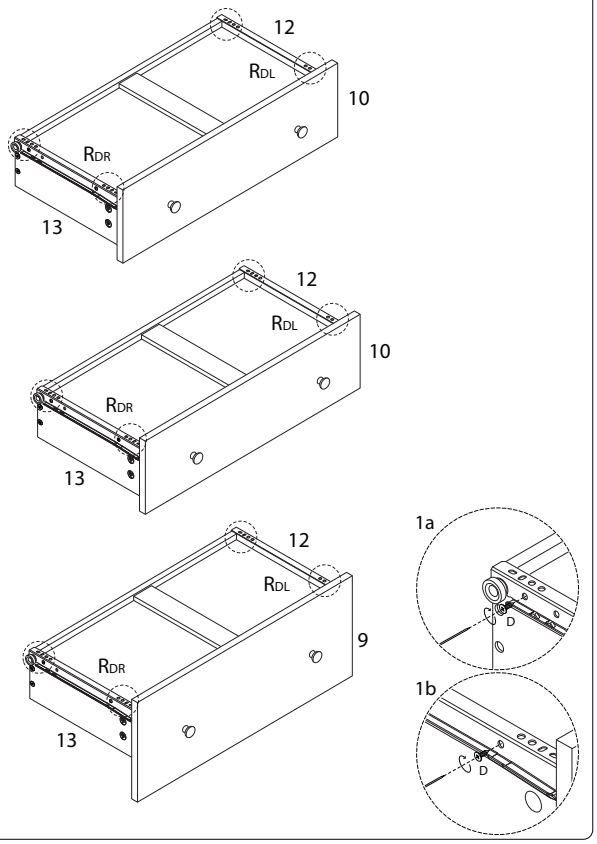

!

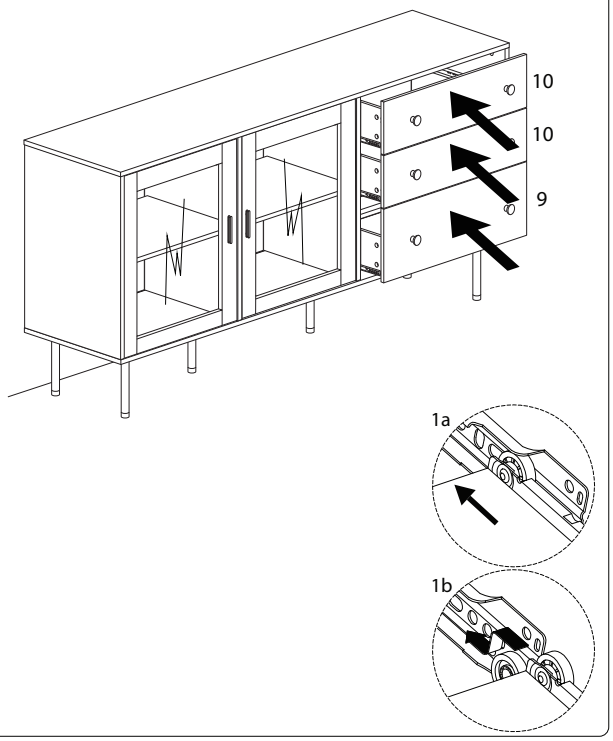

1658/MILORA/250625/