

40'

1

1/5

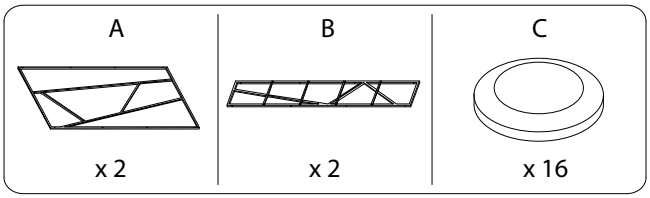

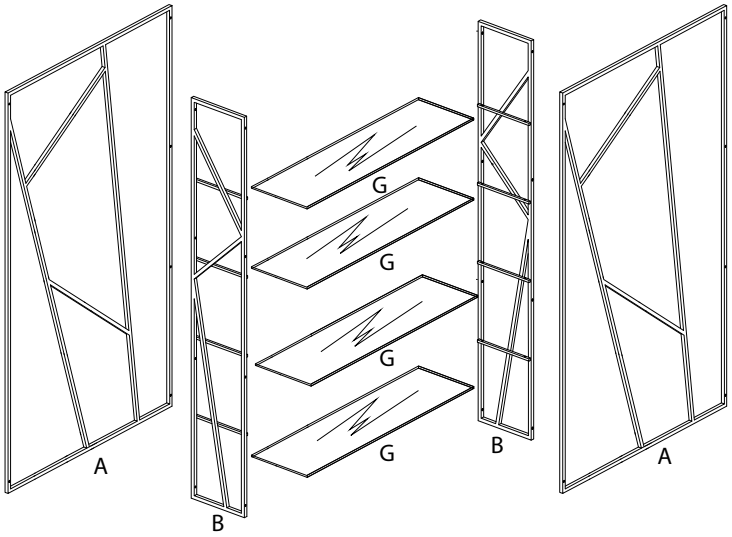

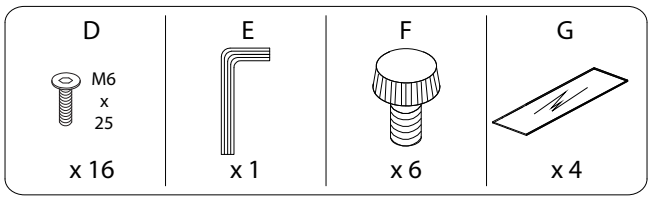

2/5

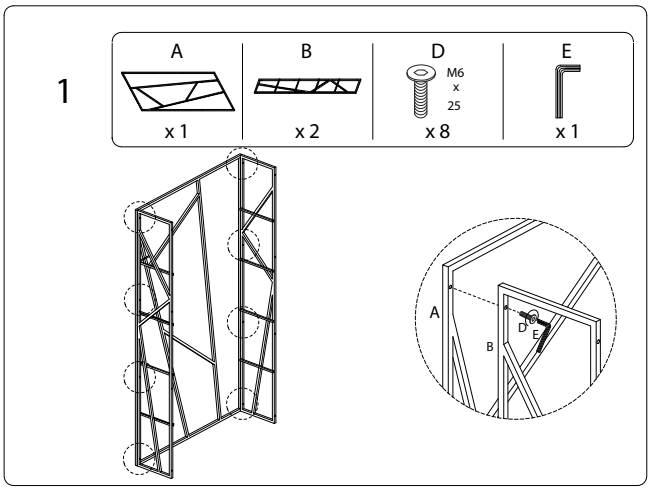

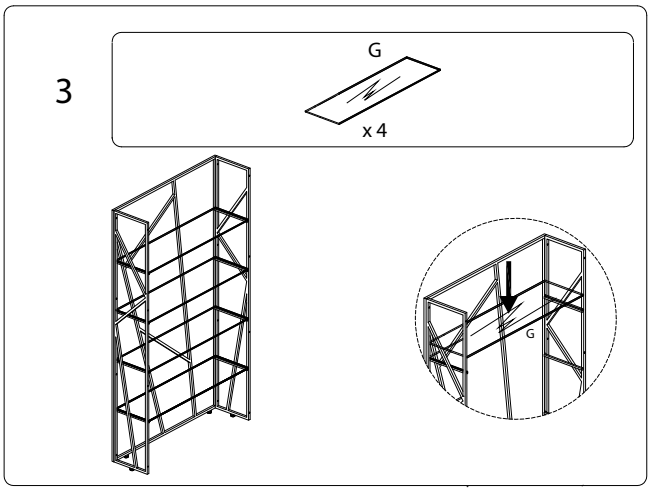

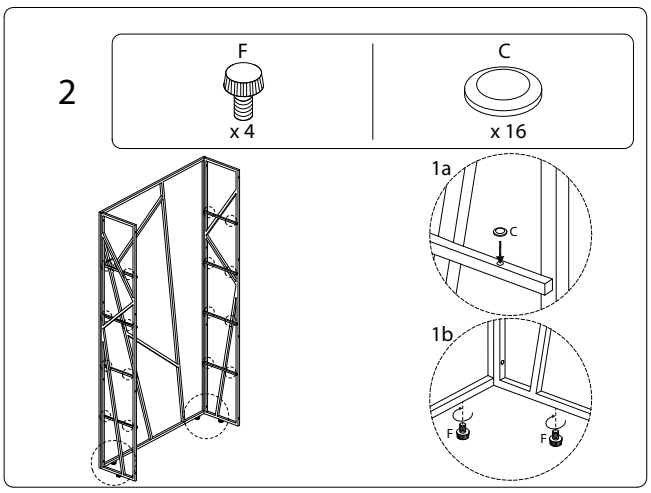

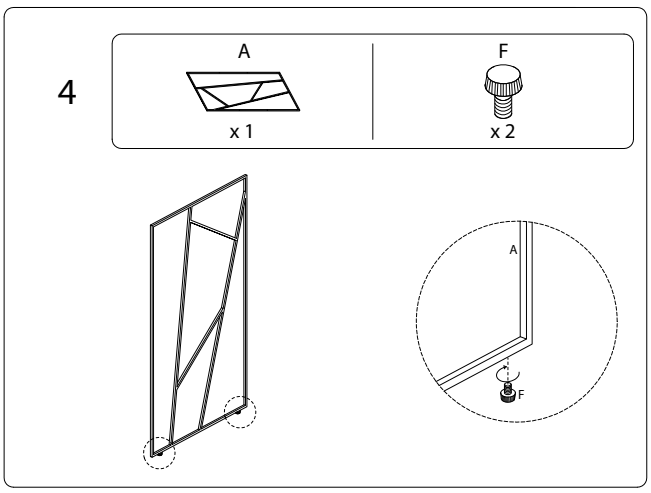

3/5

4/5

5

D	E
 M6 x 25	
x 8	x 1

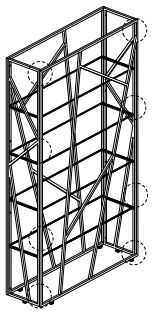

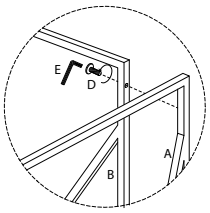

1087/HOXIE/141220/