KARLO

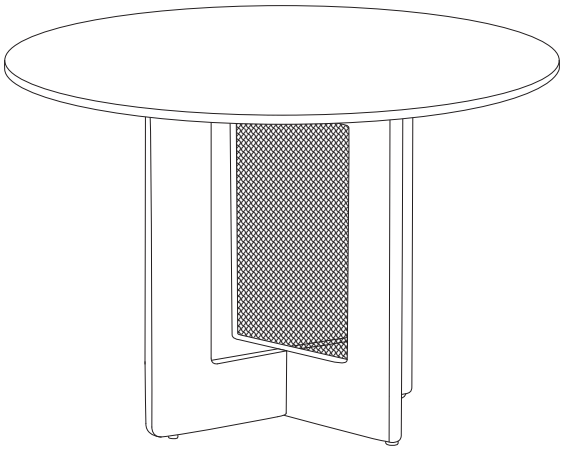

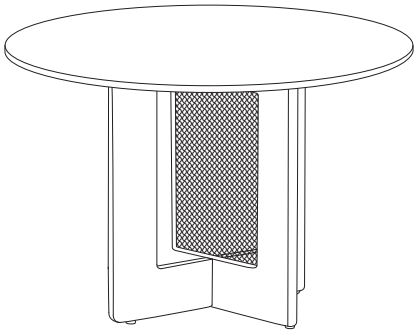

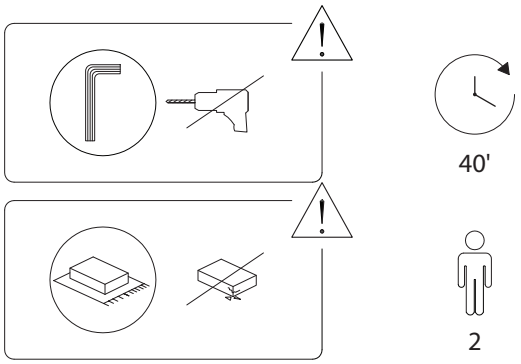

1/5

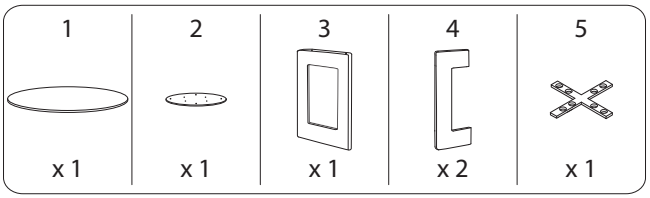

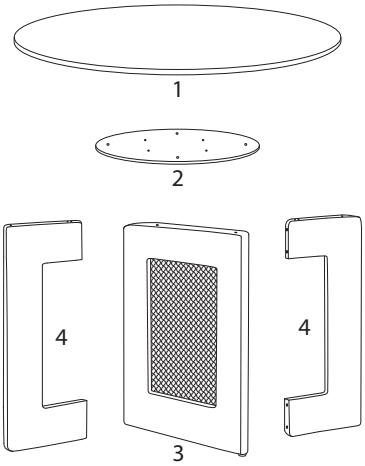

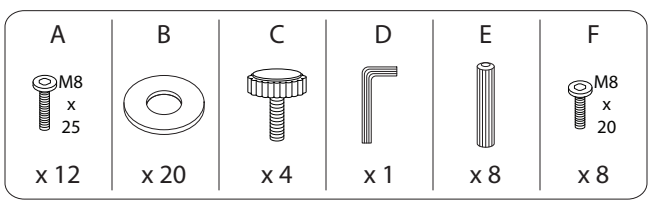

2/5

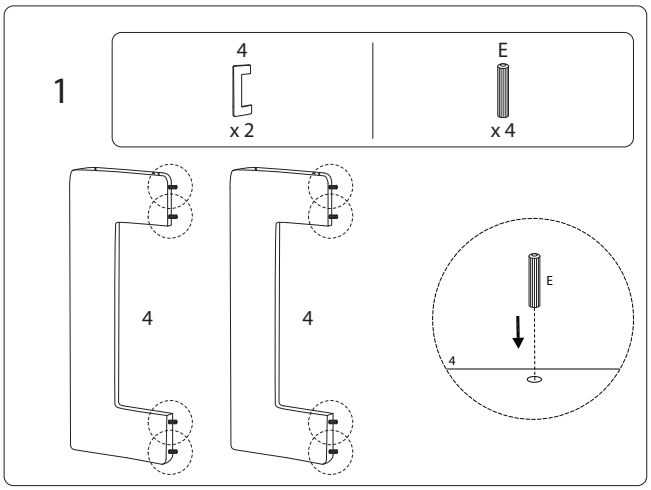

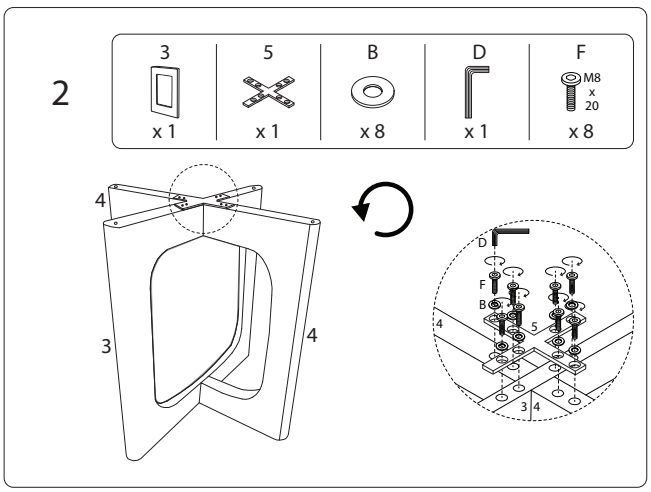

3/5

3

2	A	B	D
x 1	M8 x 25 x 4	x 4	x 1

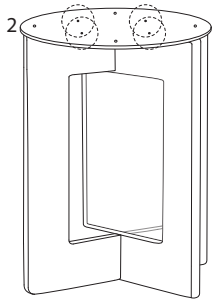

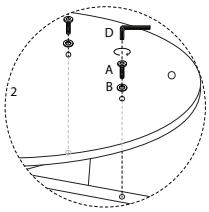

4

1	A	B	D
x 1	M8 x 25 x 4	x 4	x 1

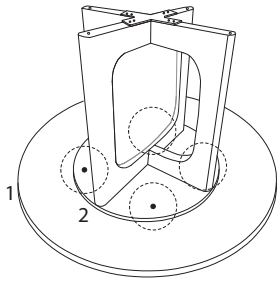

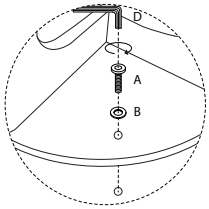

5

C
x 4

