# CHADENET



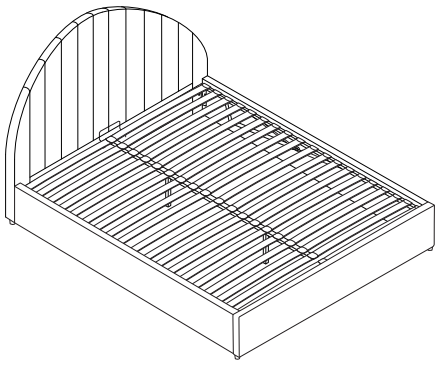

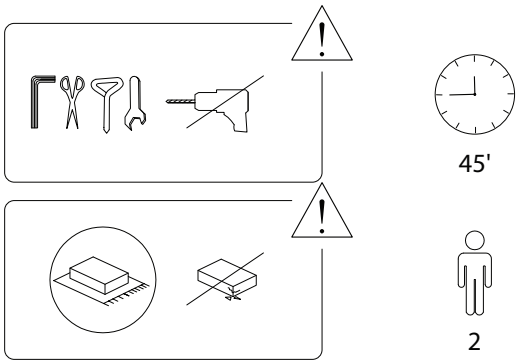


1/13



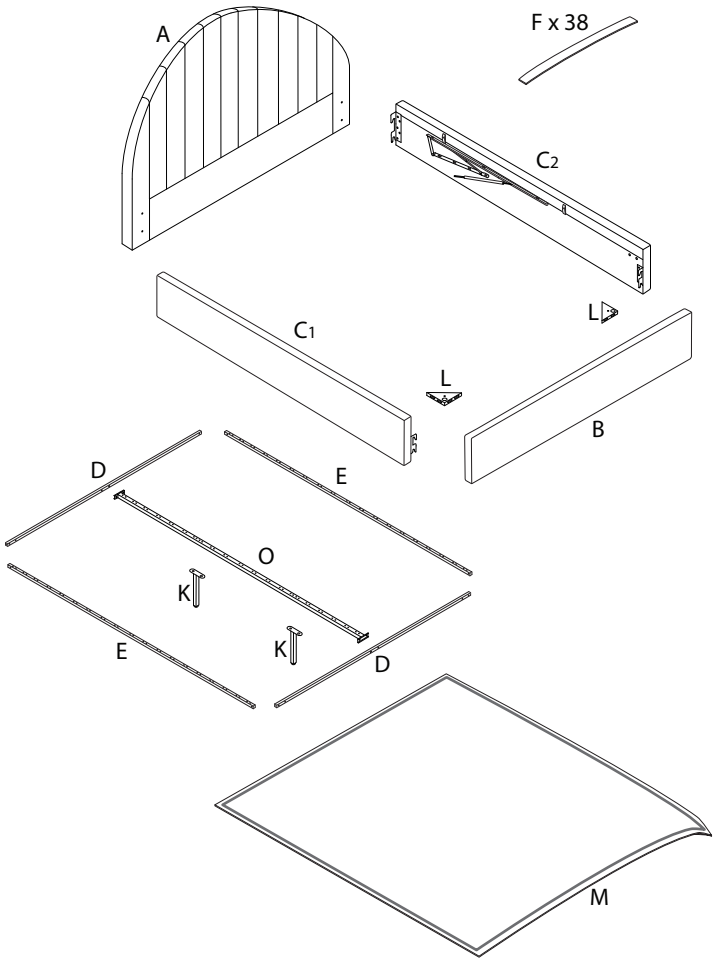


2/13



| | | |
|---|---|---|
| A<br>x 1 | B<br>x 1 | C1<br>x 1 |
| C2<br>x 1 | D<br>x 2 | E<br>x 2 |
| F<br>x 38 | G<br>x 38 | H<br>x 19 |
| I<br>x 4 | J<br>x 4 | K<br>x 2 |
| L<br>x 2 | M<br>x 1 | N<br>x 1 |

3/13

| O | P | 1 |
|---|---|---|
| 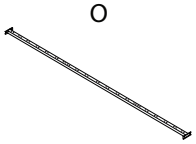 |  |  |
| x 1 | x 1 | x 16 |
| **2** | **3** | **4** |
|  |  |  |
| x 14 | x 14 | x 8 |
| **5** | **6** | **7** |
|  |  |  |
| x 8 | x 1 | x 1 |
| **8** | **9** | **10A** |
|  |  |  |
| x 1 | x 4 | x 8 |
| **10B** | | **11** |
|  | |  |
| x 8 | | x 2 |





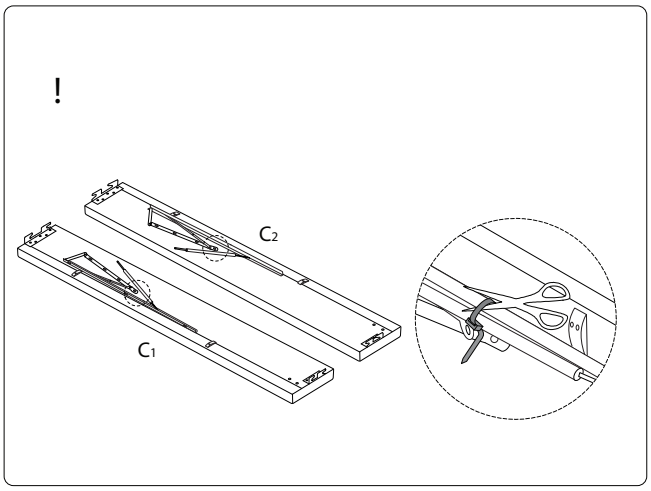


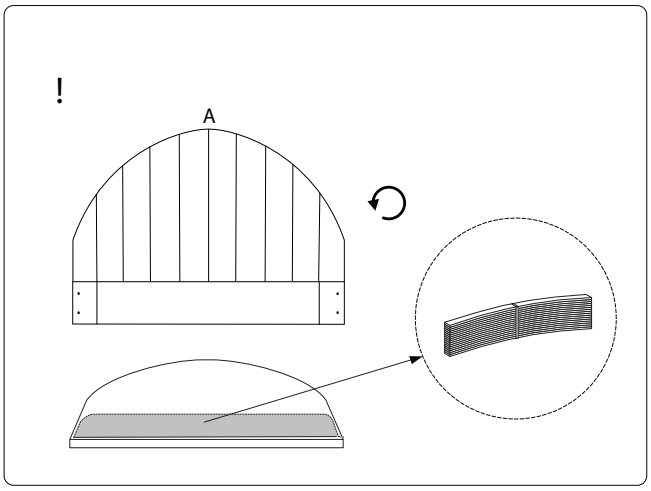






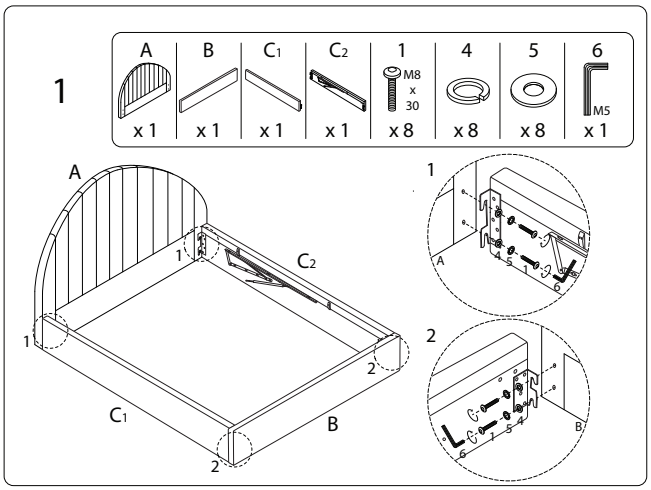


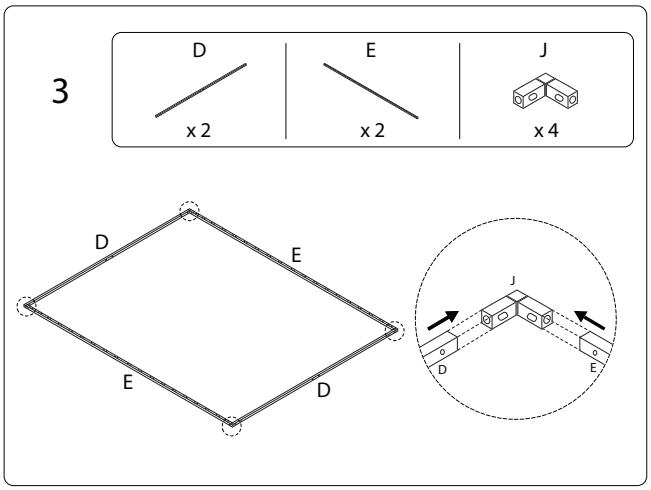


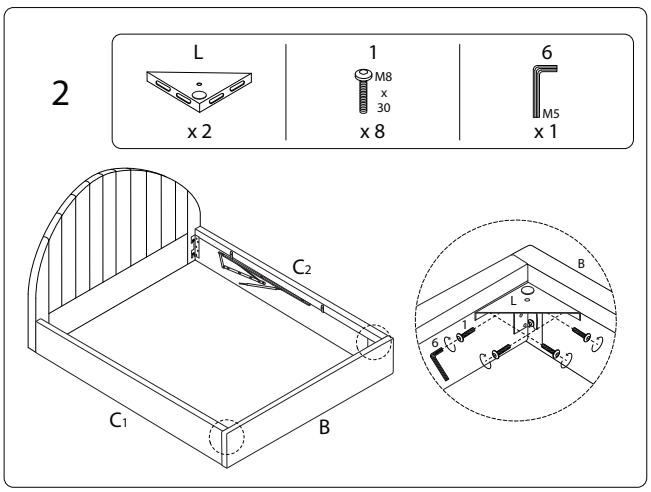


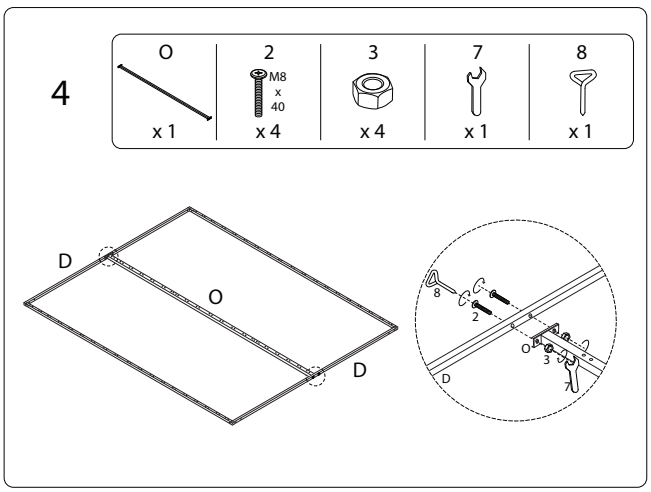

5

| 10A | 10B | 11 |
|---|---|---|
| M6 x 20 | | M4 |
| x 8 | x 8 | x 2 |

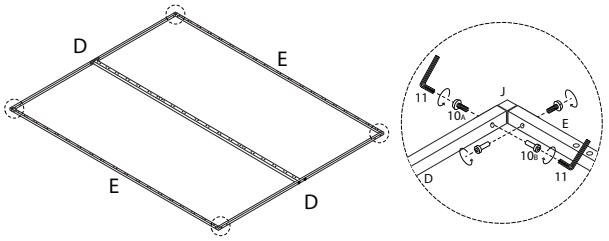





6

| 8 |
|---|
| x 1 |

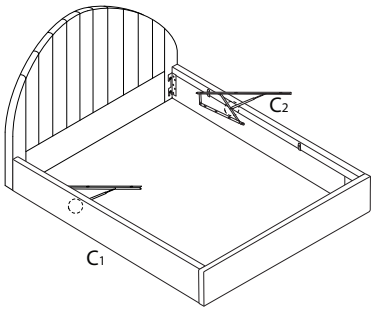


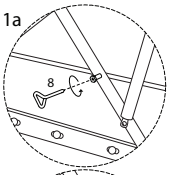


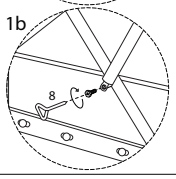




2138/CHADENET/190724/

7

| M |
|---|
| x 1 |

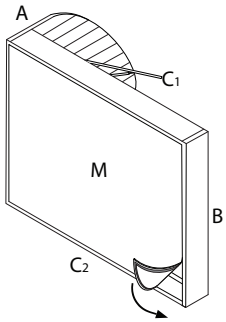


8

| I | 8 | 9 |
|---|---|---|
| x 4 | x 1 | M4 x 40 x 4 |

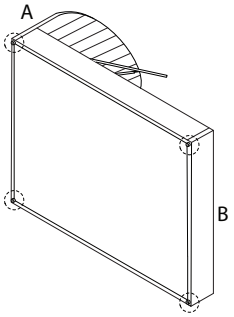


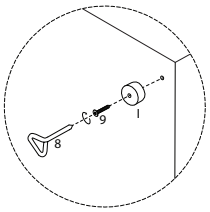




2138/CHADENET/190724/

9

| 2 | 3 | 7 | 8 |
|---|---|---|---|
| M8 x 40 | | | |
| x 6 | x 6 | x 1 | x 1 |

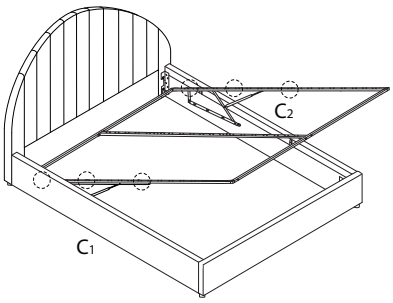


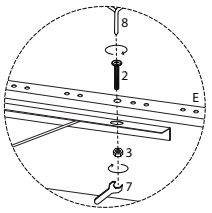


11

| N |
|---|
| x 1 |

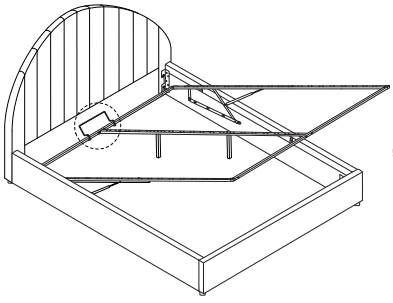

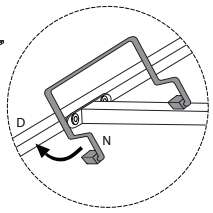


10

| K | 2 | 3 | 7 | 8 |
|---|---|---|---|---|
| | M8 x 40 | | | |
| x 2 | x 4 | x 4 | x 1 | x 1 |

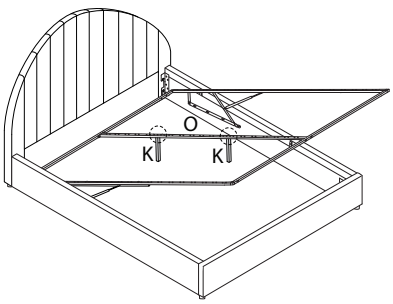


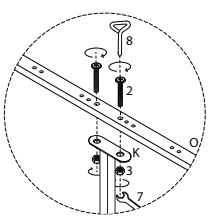




2138/CHADENET/190724/

!

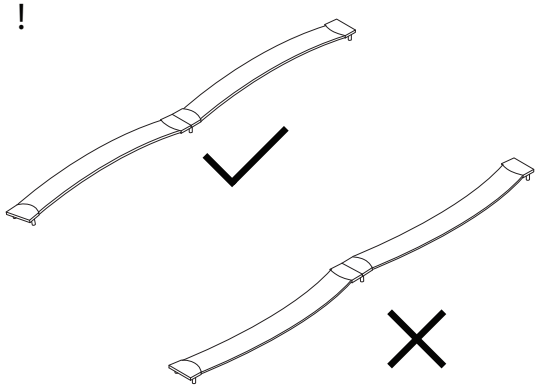



2138/CHADENET/190724/

12 x 19

| F | G | H |
|---|---|---|
| x 2 | x 2 | x 1 |

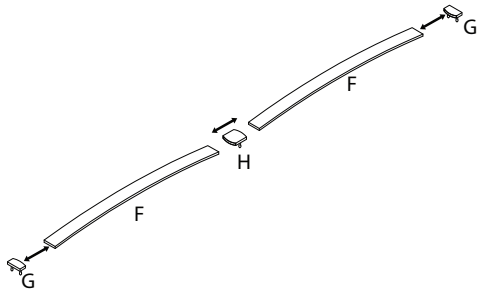


14

| P |
|---|
| x 1 |

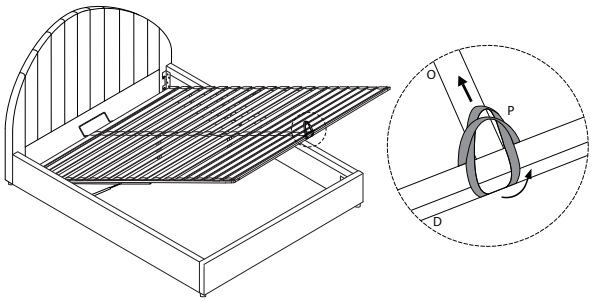


13

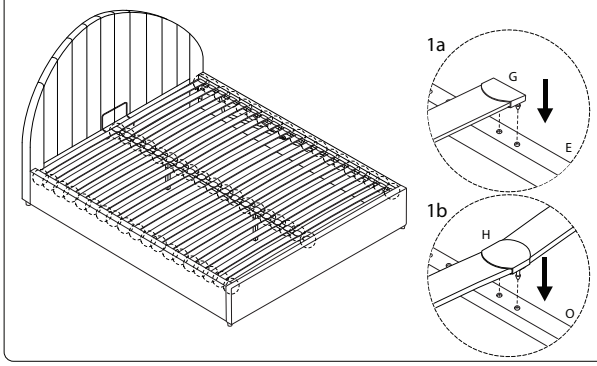






2138/CHADENET/190724/



2138/CHADENET/190724/