

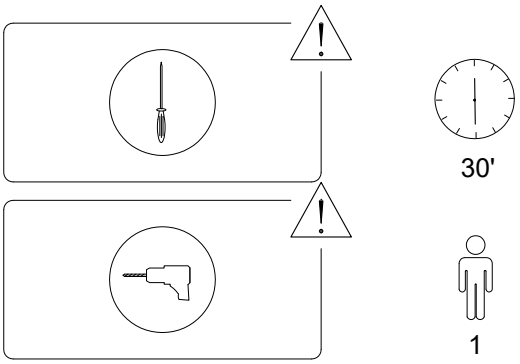

A	B	C	D	E	F	G	H
x 1	x 2	x 2	x 1	x 2	x 1	x 1	x 18

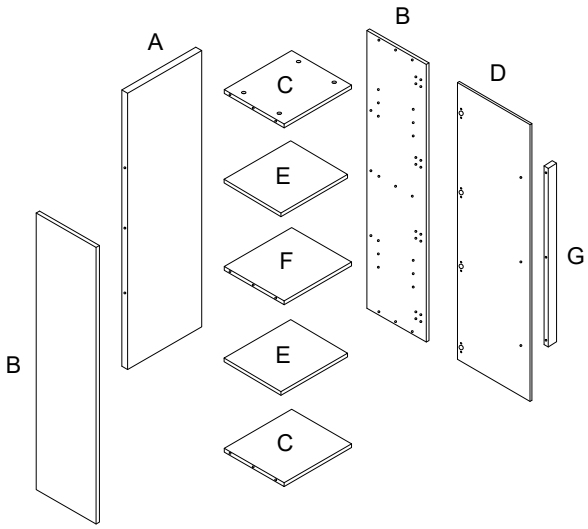

I	J	K	L	M	N	O	P
x 18	x 8	x 4	4 x 24 x 3	x 4	3.5 x 14 x 30	x 8	x 16

1

A	C	H	I
x 1	x 2	x 2	x 2

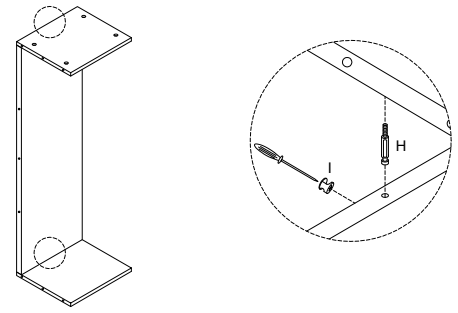

2

B	F	H	I	J
x 2	x 1	x 16	x 16	x 8

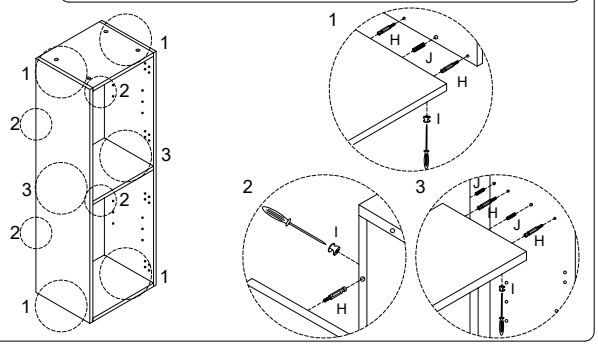

3

K	N
x 4	3.5 x 14 x 16

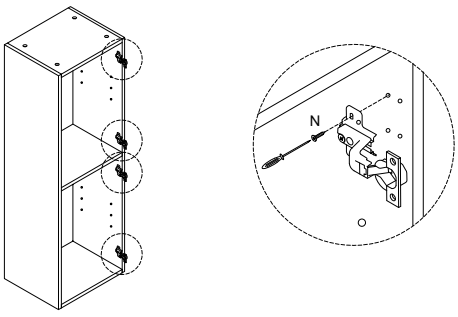

4

D	N
x 1	3.5 x 14 x 8

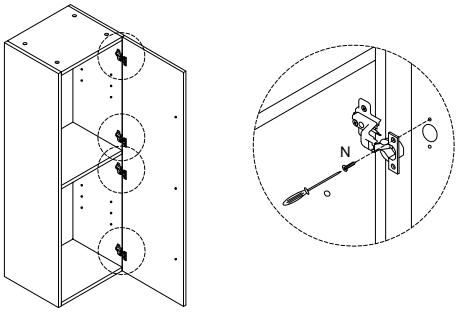

!

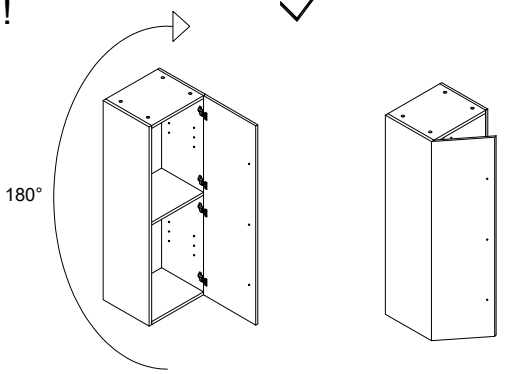

5

G	L
x 1	4 x 24 x 3

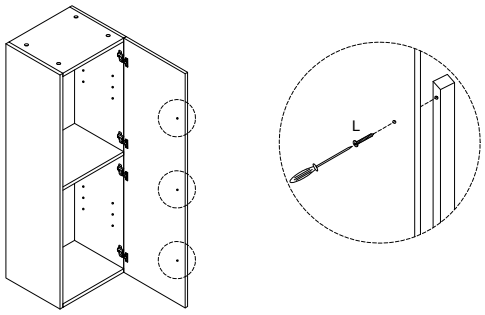

5/7

6

O	P
x 8	x 16

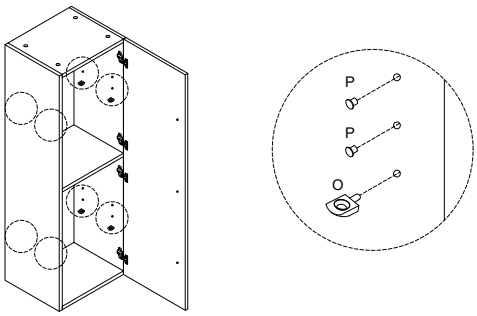

7

E
x 2

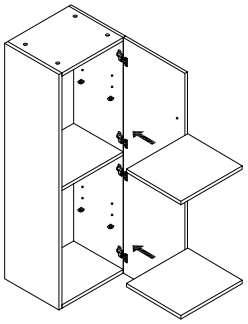

6/7

8

M	N
x 2	3.5 x 14 x 6

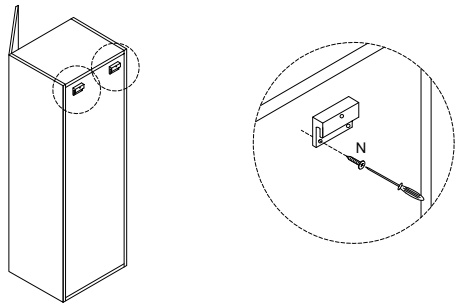

9

M
x 2

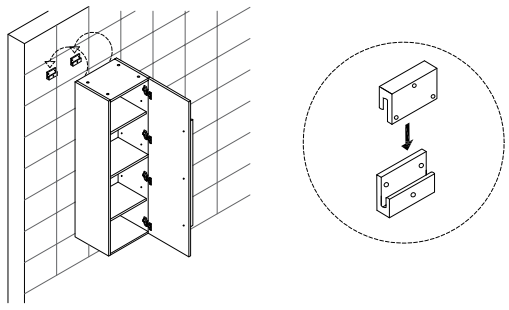

7/7