COSTELLO

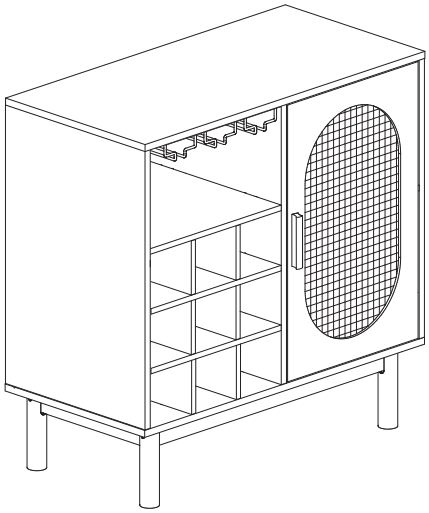

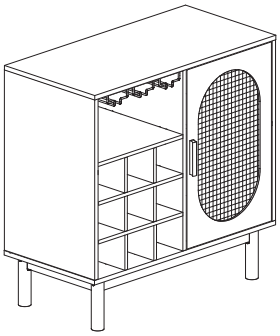

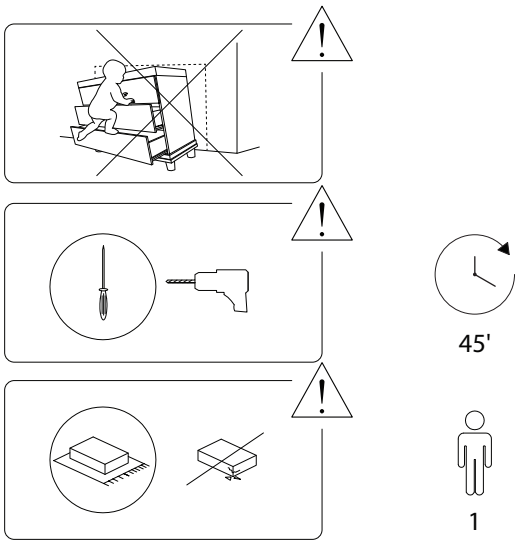
45'
1

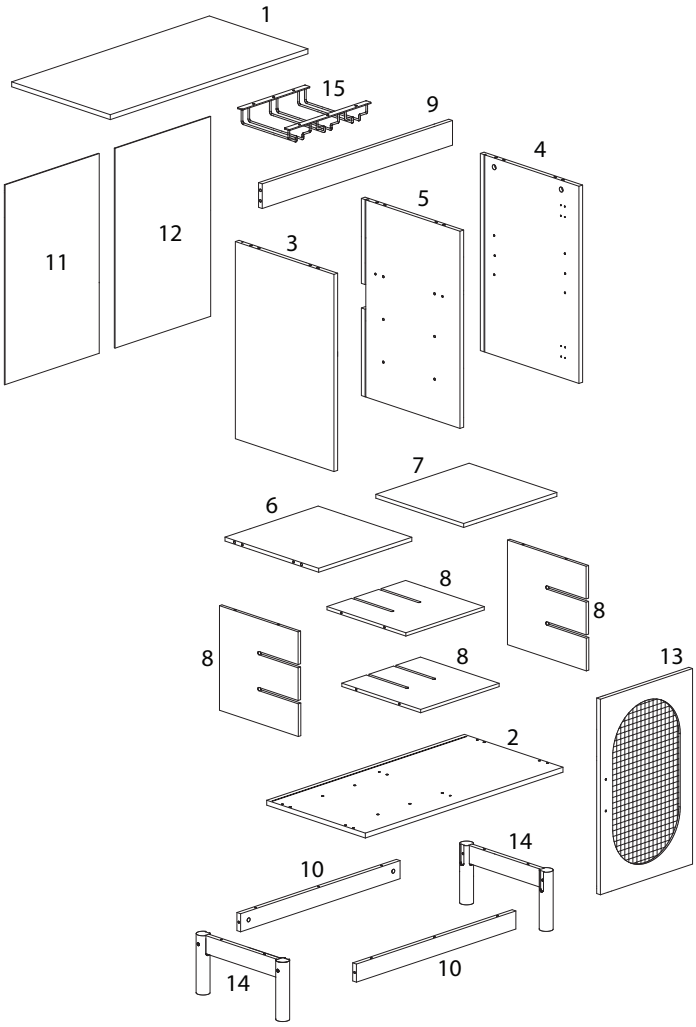
1
15
9
4
5
11
12
3
7
6
8
8
8
8
13
2
14
10
10
14

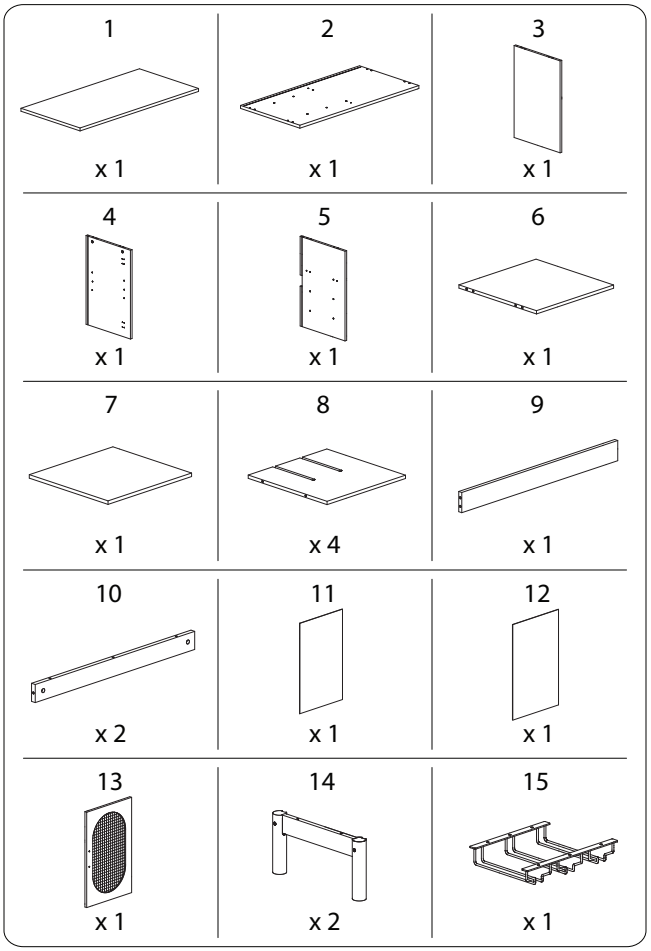
1
x 1
2
x 1
3
x 1
4
x 1
5
x 1
6
x 1
7
x 1
8
x 4
9
x 1
10
x 2
11
x 1
12
x 1
13
x 1
14
x 2
15
x 1

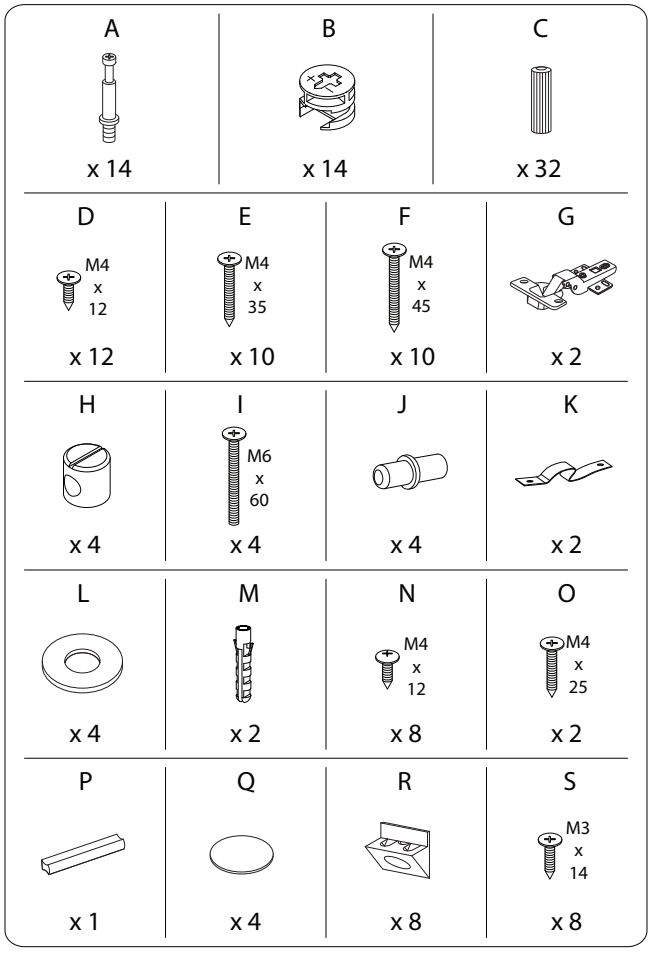
A
x 14
B
x 14
C
x 32
D
M4 x 12
x 12
E
M4 x 35
x 10
F
M4 x 45
x 10
G
x 2
H
x 4
I
M6 x 60
x 4
J
x 4
K
x 2
L
x 4
M
x 2
N
M4 x 12
x 8
O
M4 x 25
x 2
P
x 1
Q
x 4
R
x 8
S
M3 x 14
x 8

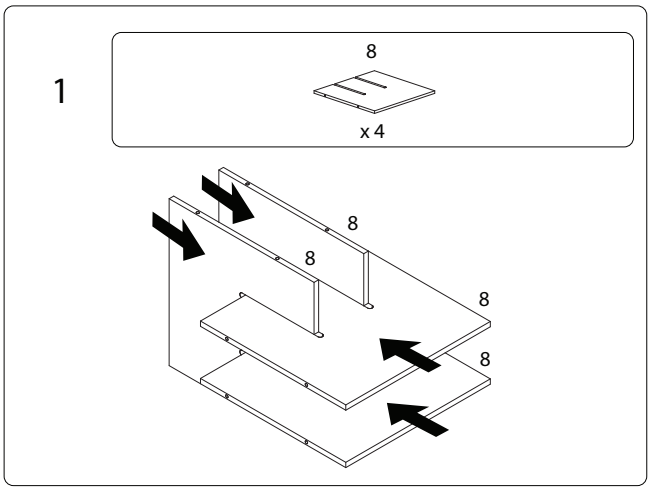
1
8
x 4
8
8
8
8

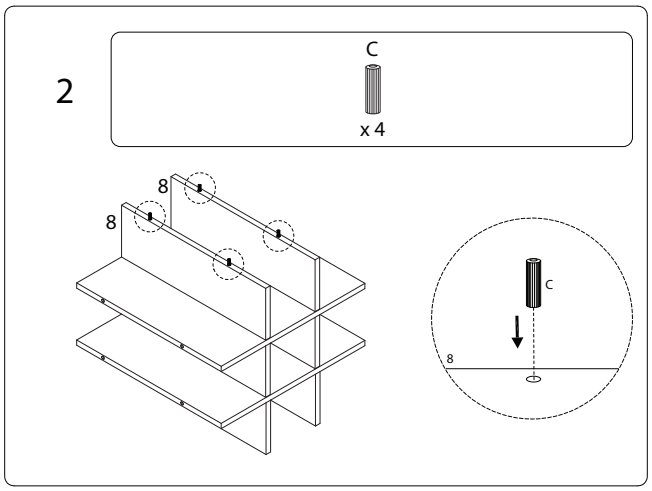
2
C
x 4
8
8
C
8

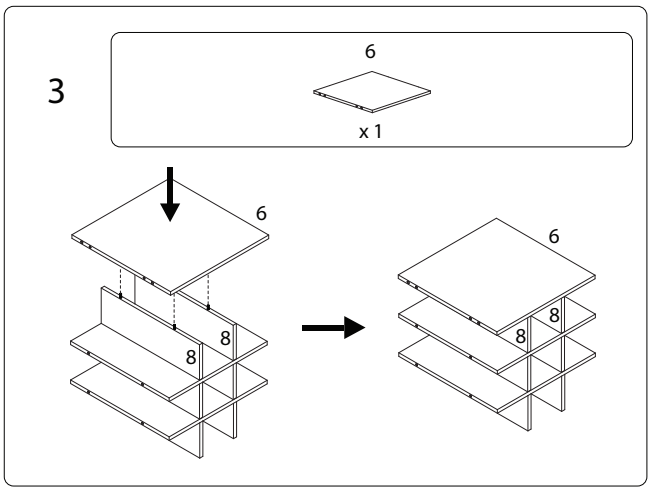
3
6
x 1
6
8
8
6
8
8

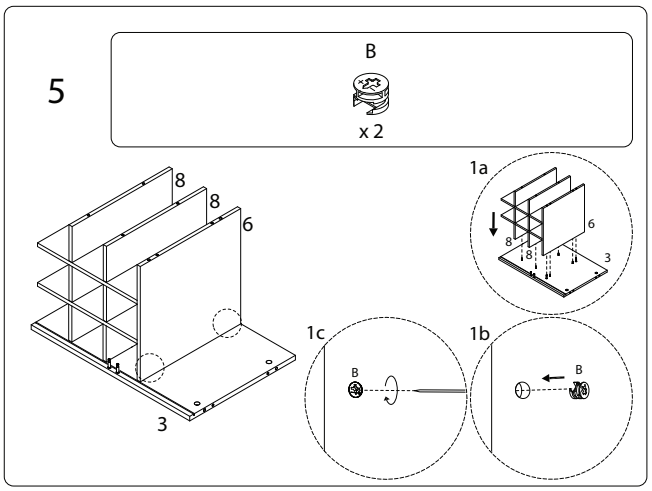
5
B
x 2
8
8
6
3
1a
6
8
8
3
1c
B
1b
B

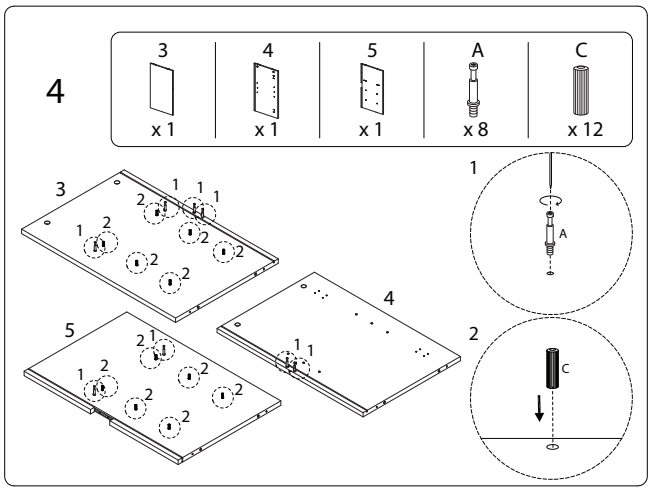
4
3
x 1
4
x 1
5
x 1
A
x 8
C
x 12
3
5
4
1
A
2
C

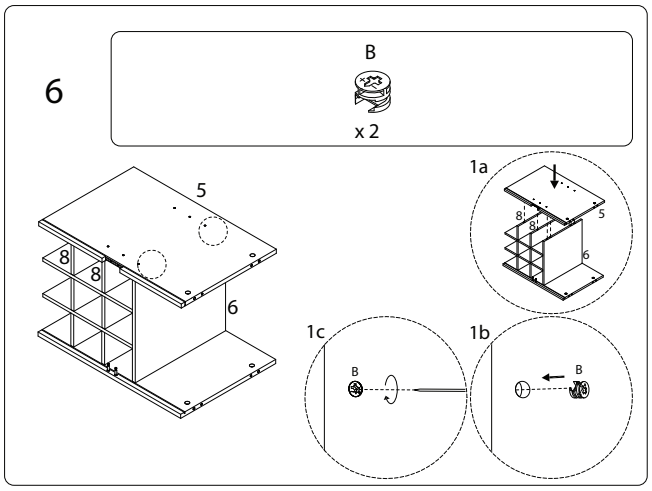
6
B
x 2
5
8
8
6
1a
8
8
5
6
1c
B
1b
B

7

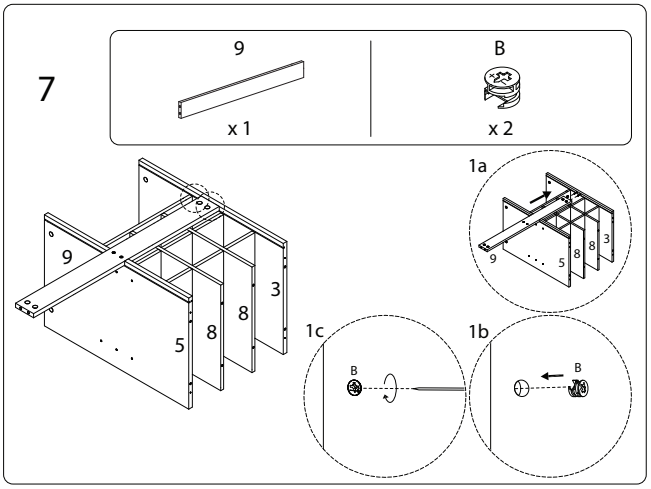

8

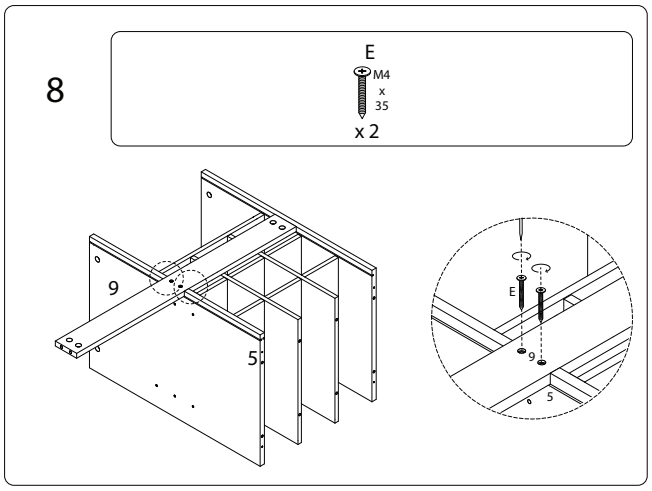

9

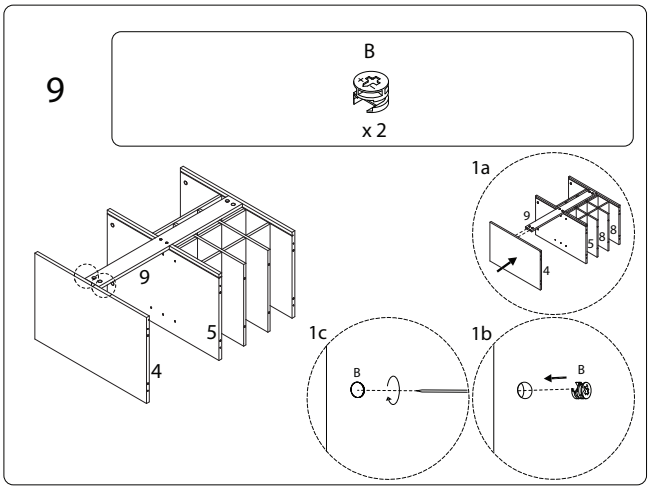

10

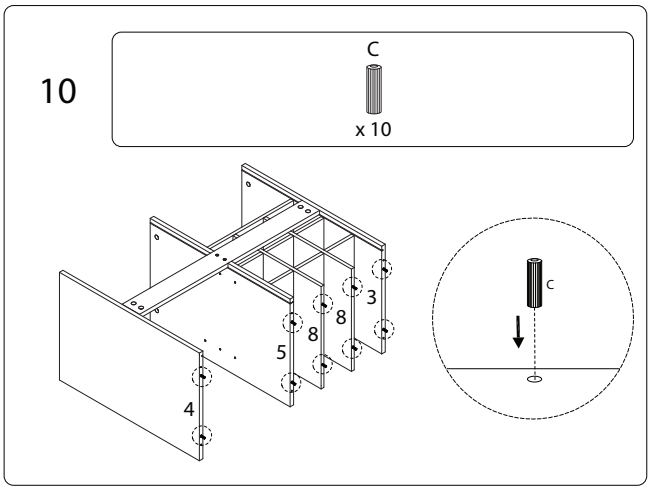

11

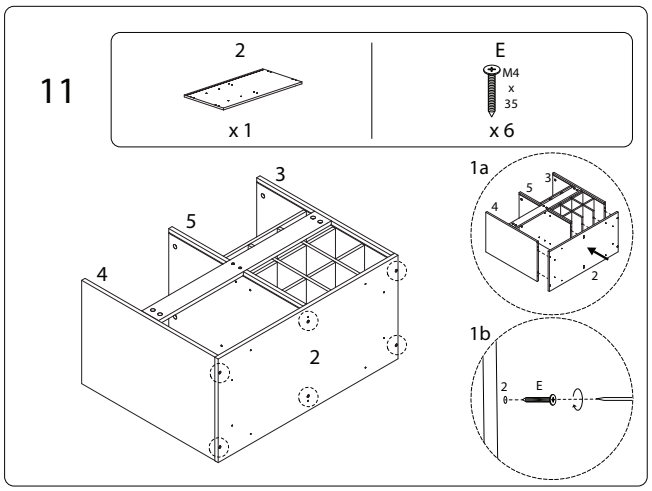

12

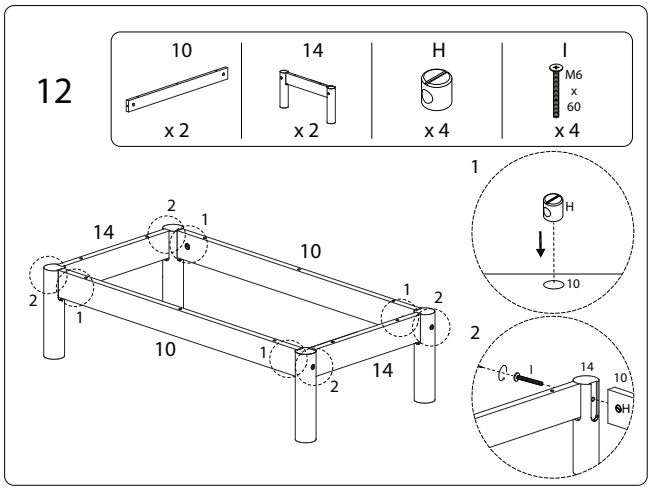

13

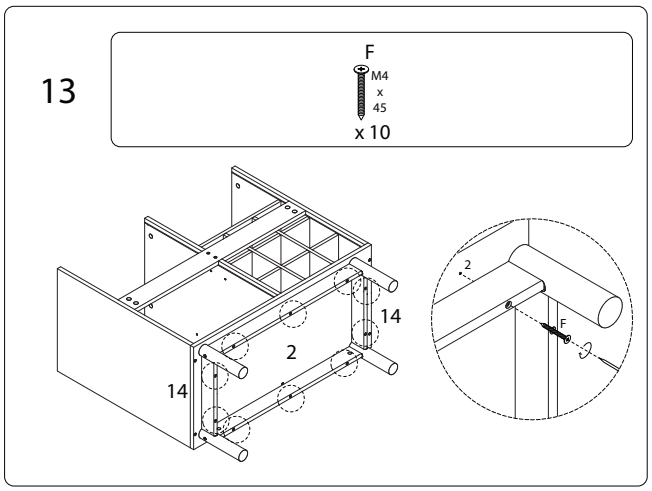

14

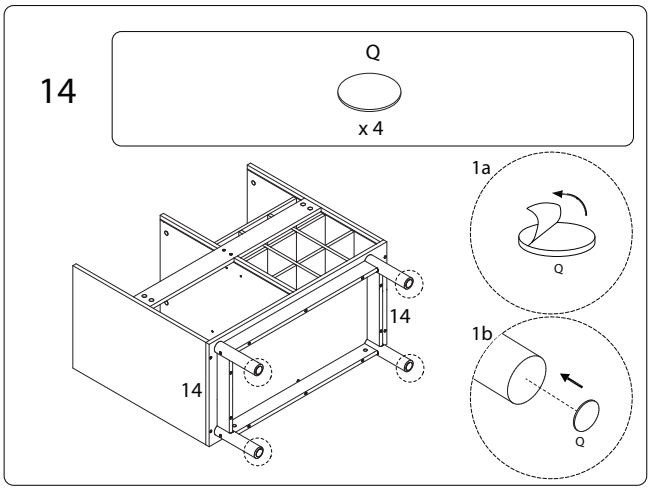

15

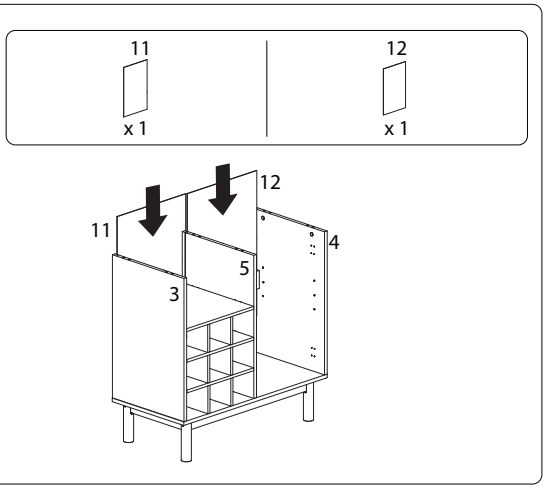

16

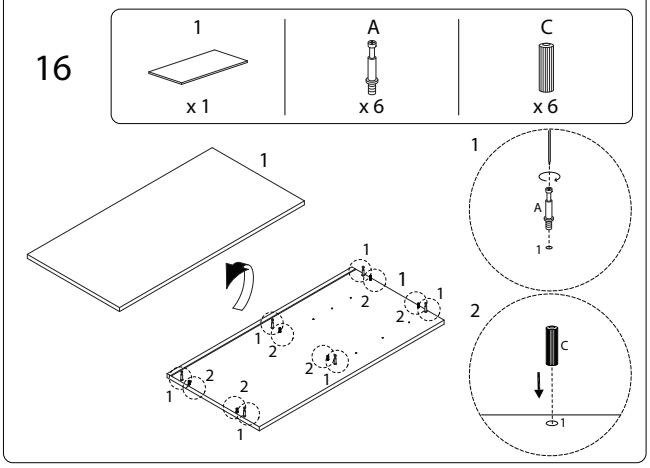

17

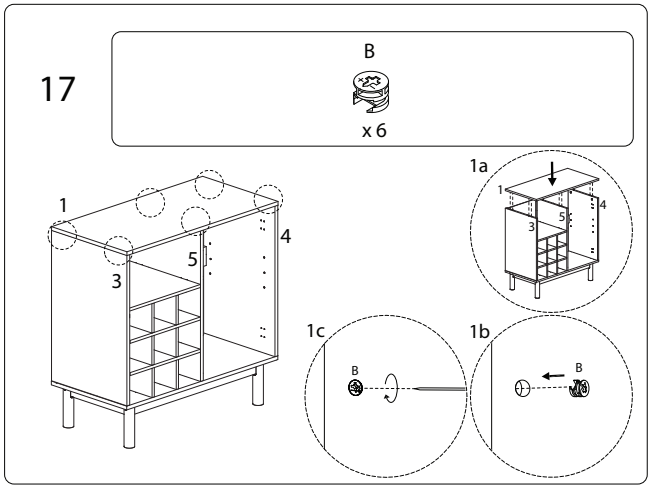

18

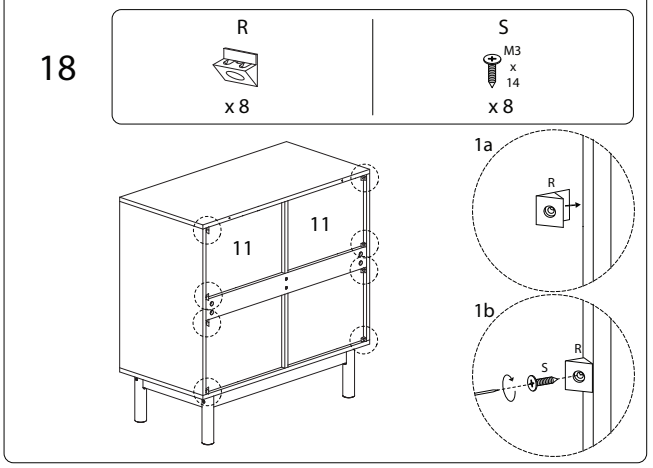

19

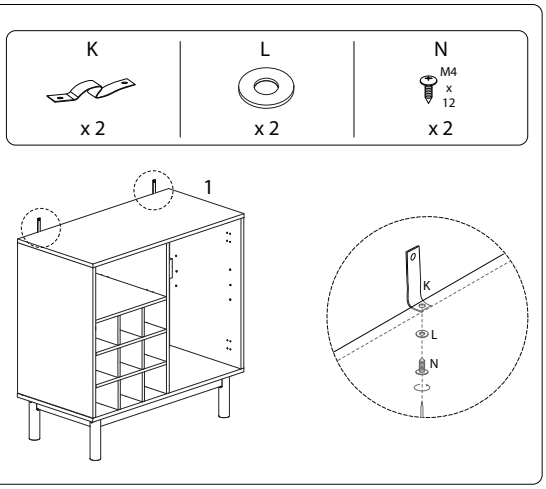

20

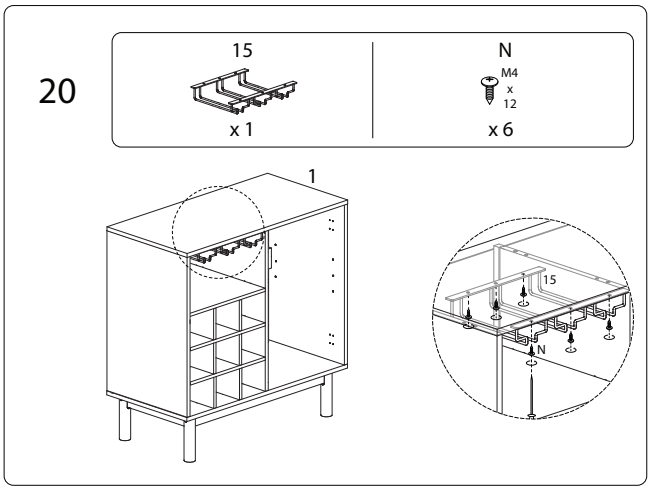

21

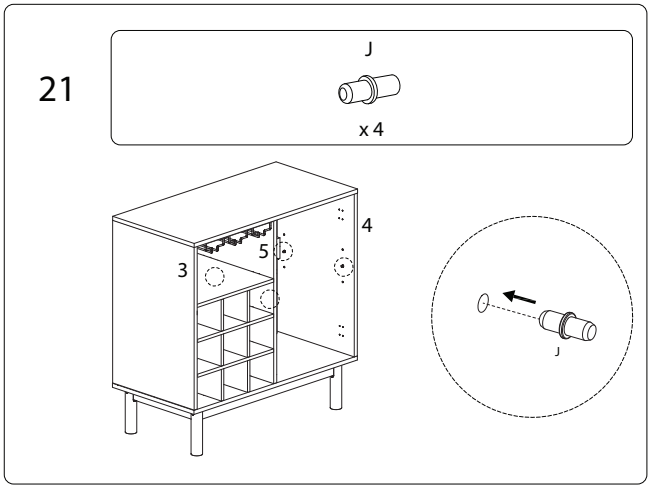

22

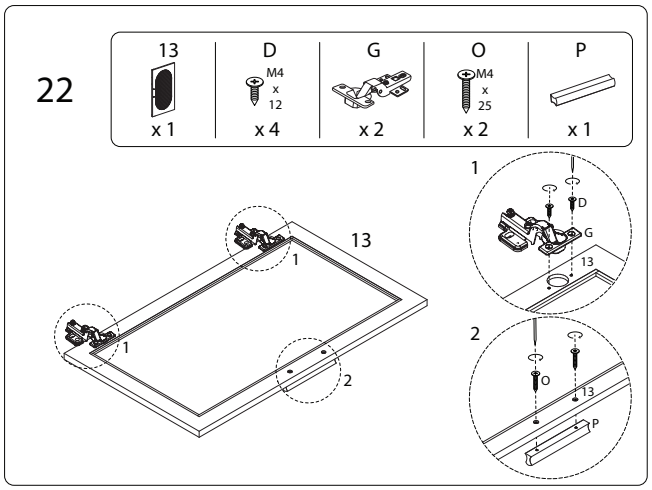

23

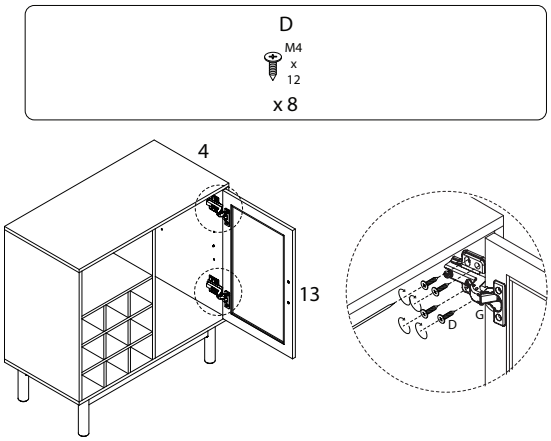

24

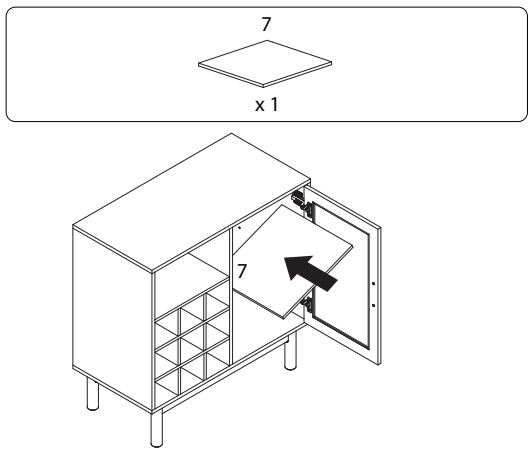

25

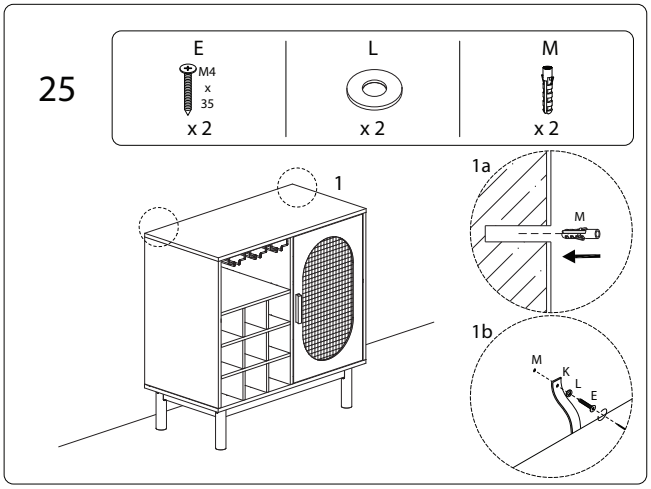
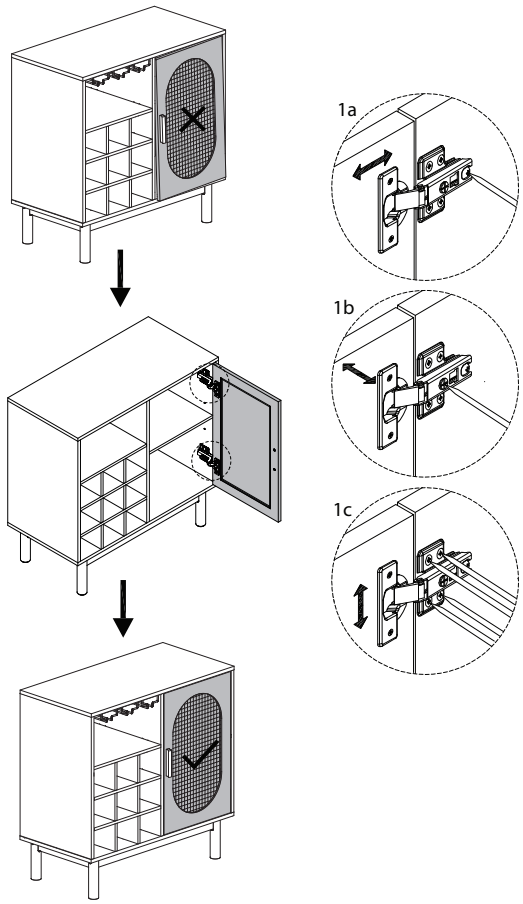
26