

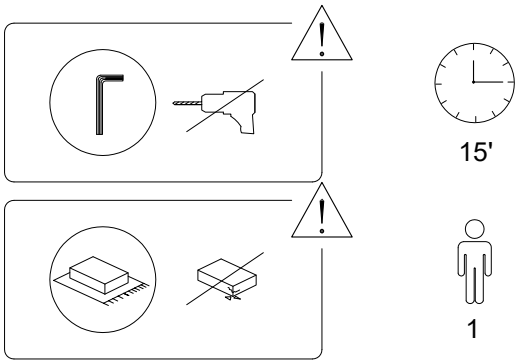

1/3

A	B	C
x 2	x 1	x 4

A x 2

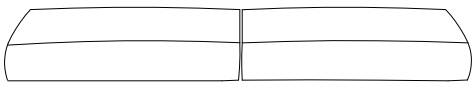

B

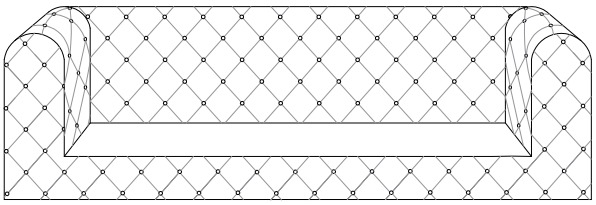

C x 4

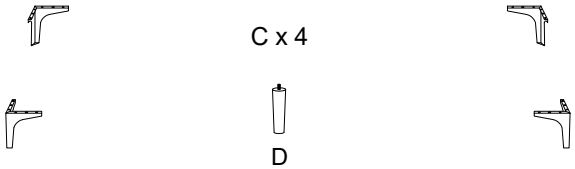

D	E	F	G
x 1	M6 x 18 x 8	x 8	x 1

2/3

1

B	C	D	E	F	G
x 1	x 4	x 1	M6 x 18 x 8	x 8	x 1

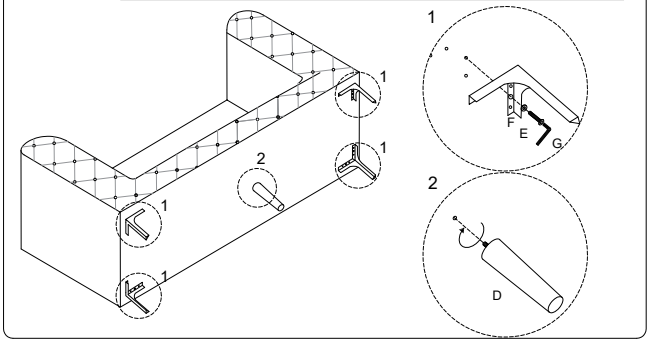

2

A
x 2

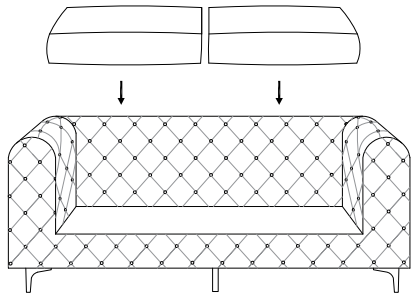

3/3