LAJAMANU

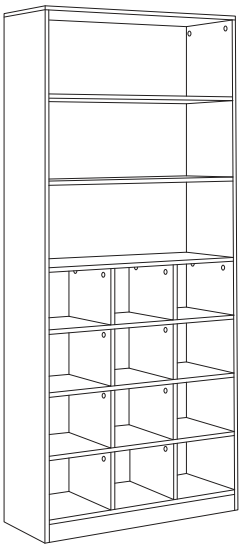

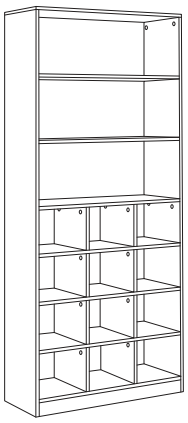

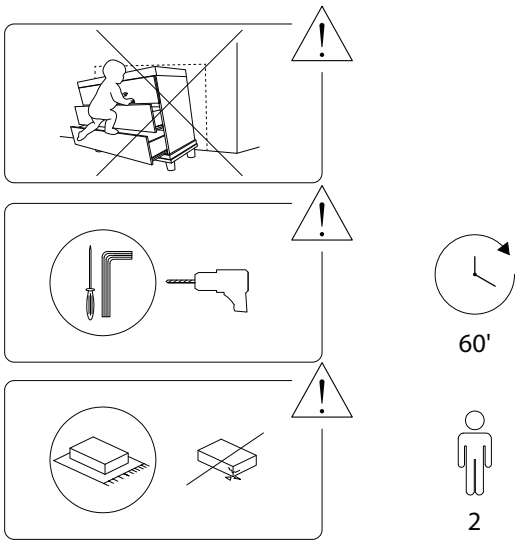
60'
2

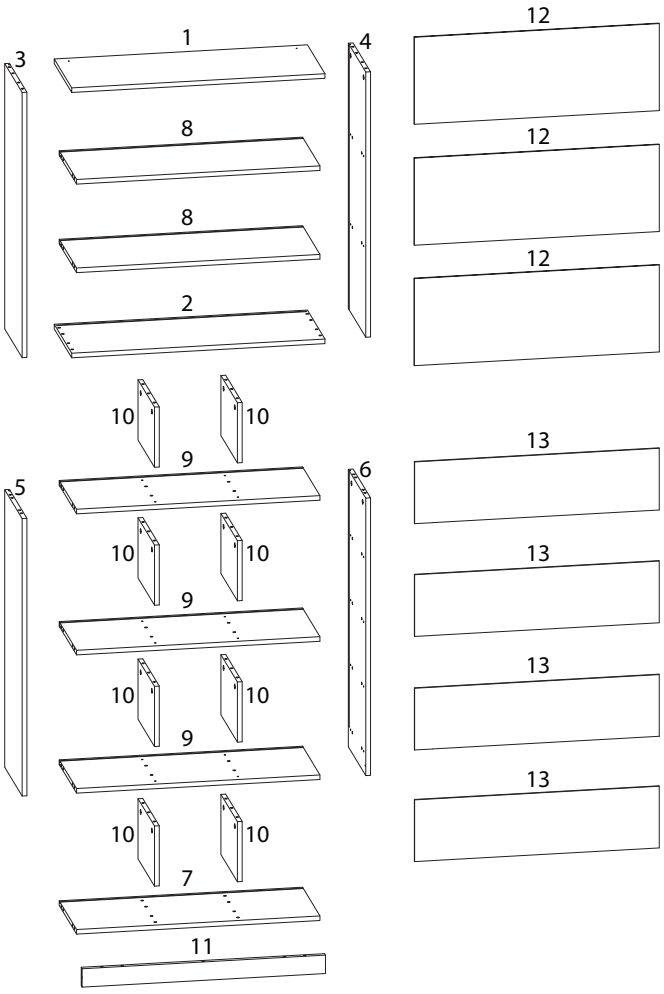
3
1
4
12
8
12
8
12
2
10
10
9
5
6
13
10
10
13
9
10
10
13
9
10
10
13
7
11

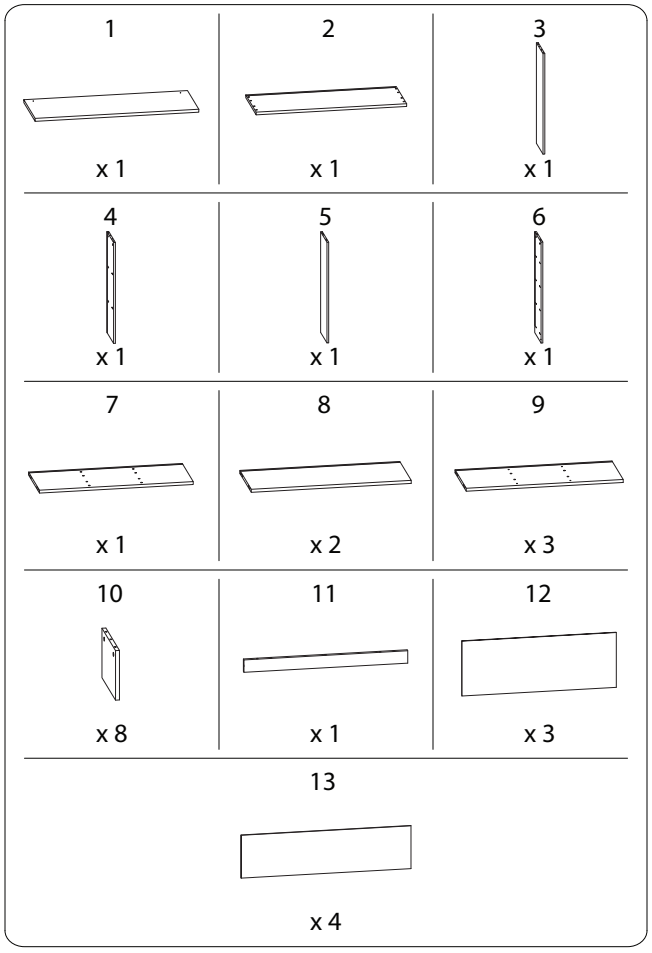
1
x 1
2
x 1
3
x 1
4
x 1
5
x 1
6
x 1
7
x 1
8
x 2
9
x 3
10
x 8
11
x 1
12
x 3
13
x 4

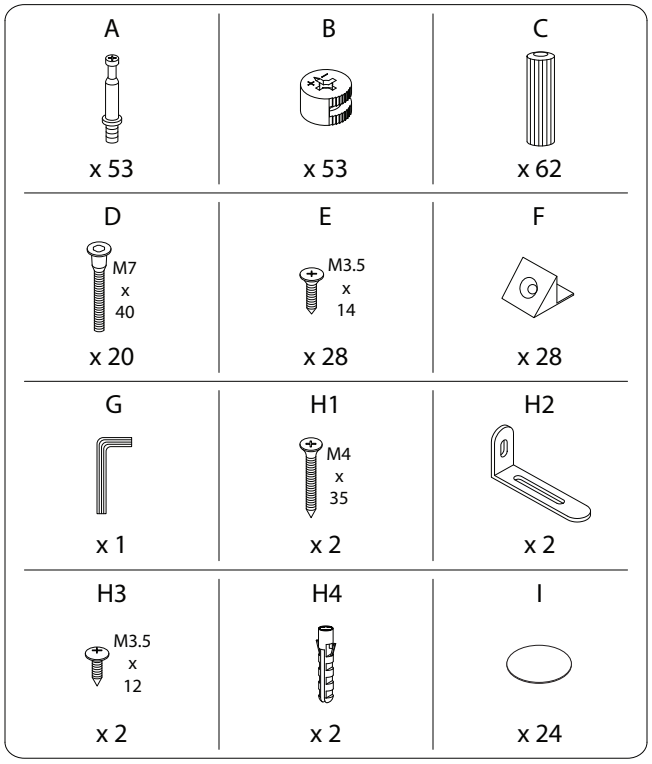
A
x 53
B
x 53
C
x 62
D
M7
x
40
x 20
E
M3.5
x
14
x 28
F
x 28
G
x 1
H1
M4
x
35
x 2
H2
x 2
H3
M3.5
x
12
x 2
H4
x 2
I
x 24

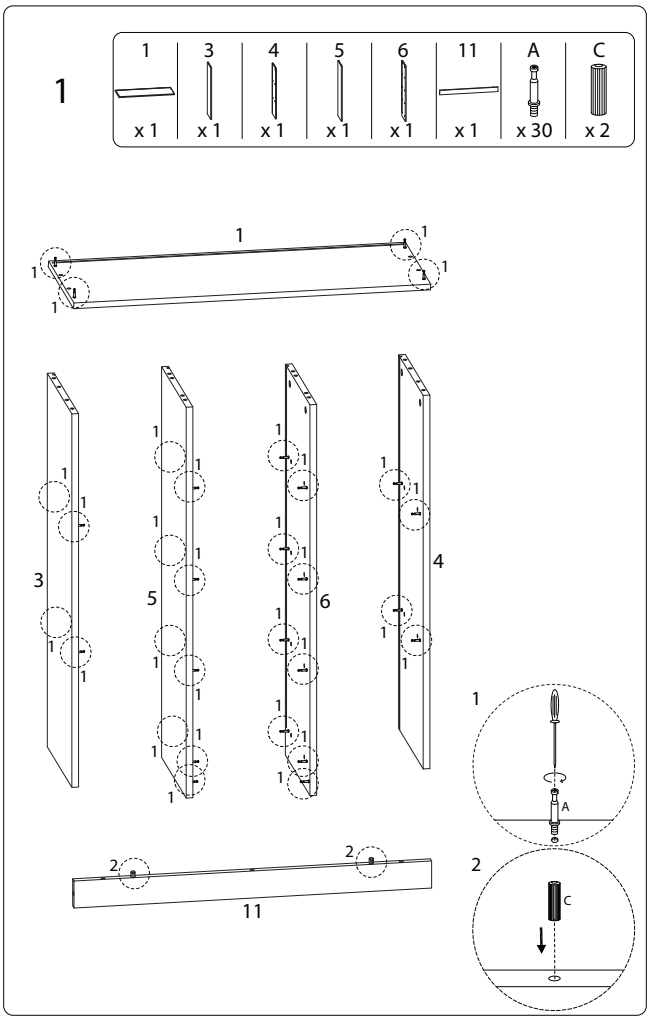
1
1
x 1
3
x 1
4
x 1
5
x 1
6
x 1
11
x 1
A
x 30
C
x 2
1
3
5
6
4
2
11
A
C

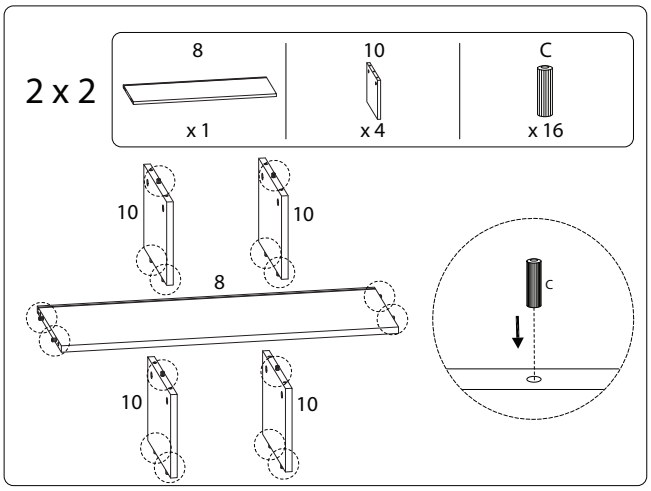
2 x 2
8
x 1
10
x 4
C
x 16
10
10
8
10
10
C

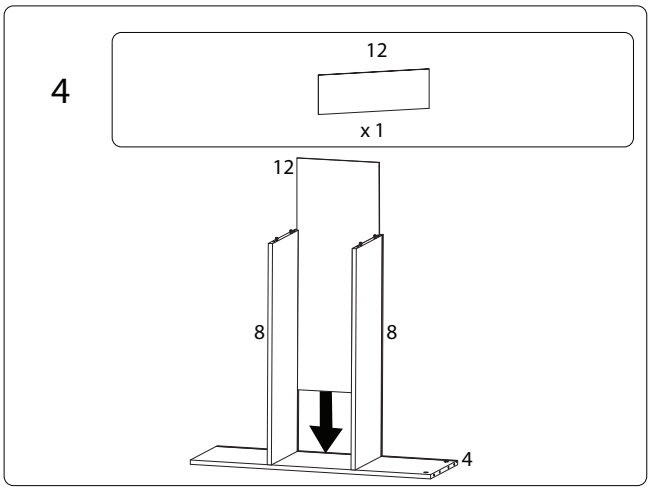
4
12
x 1
12
8
8
4

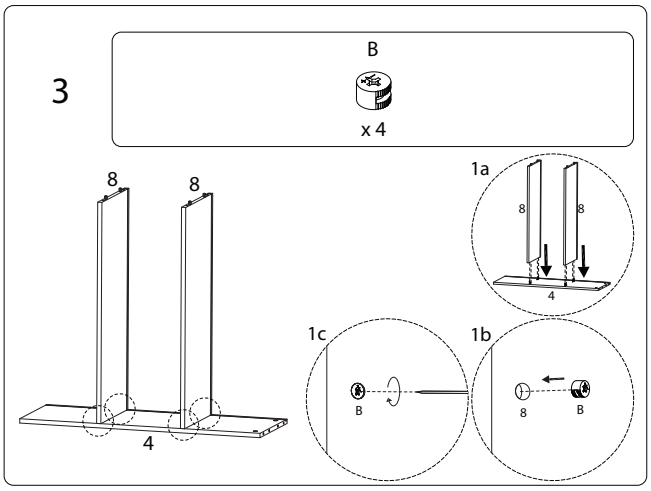
3
B
x 4
8
8
4
1a
8
8
4
1c
B
1b
8
B

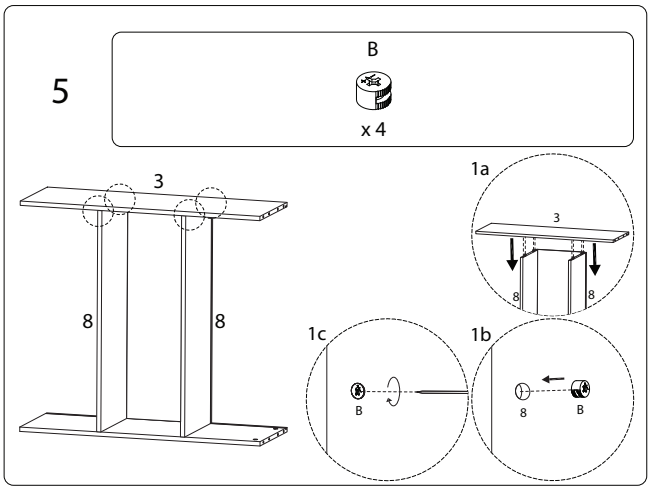
5
B
x 4
3
8
8
1a
3
8
8
1c
B
1b
8
B

6

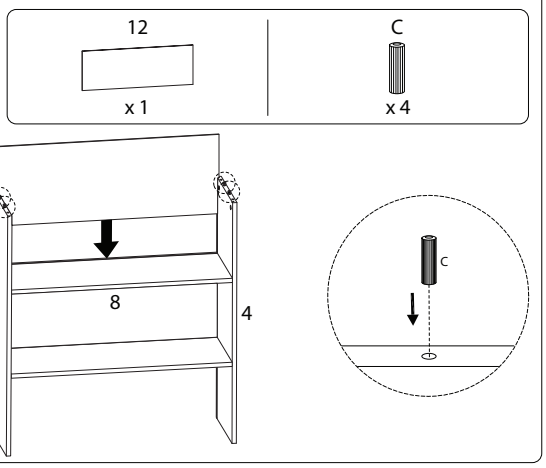

7

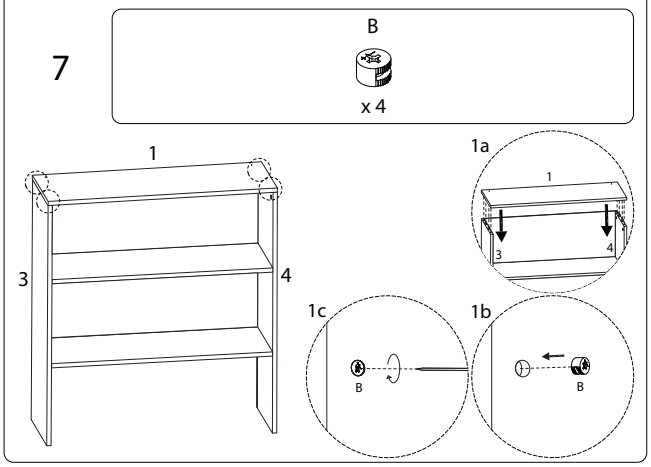

8

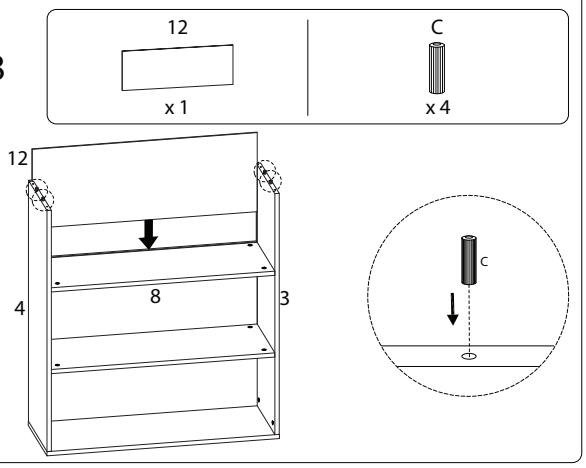

9

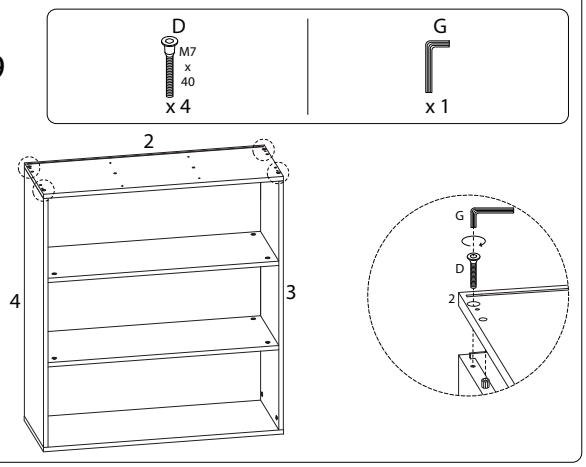

10

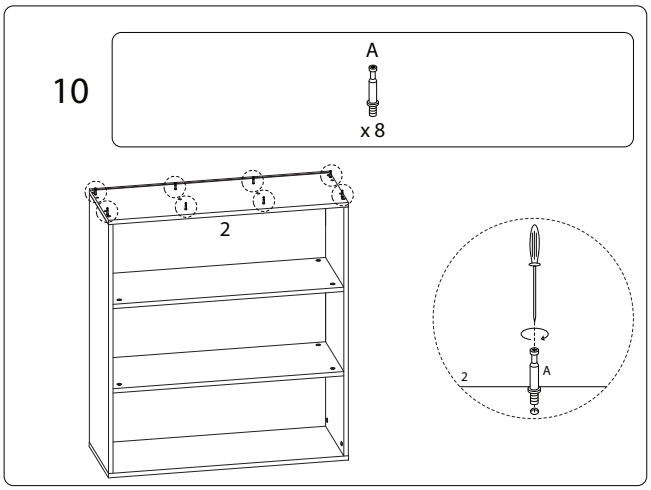

11

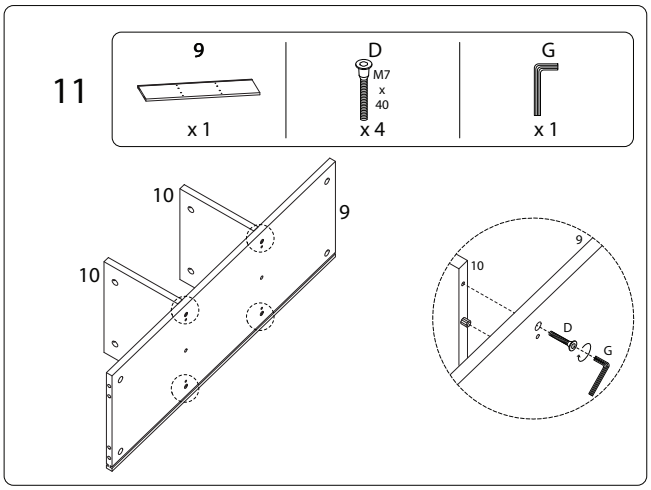

12

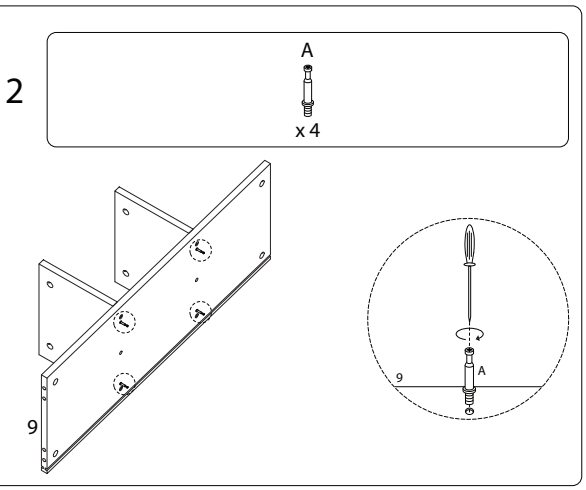

13

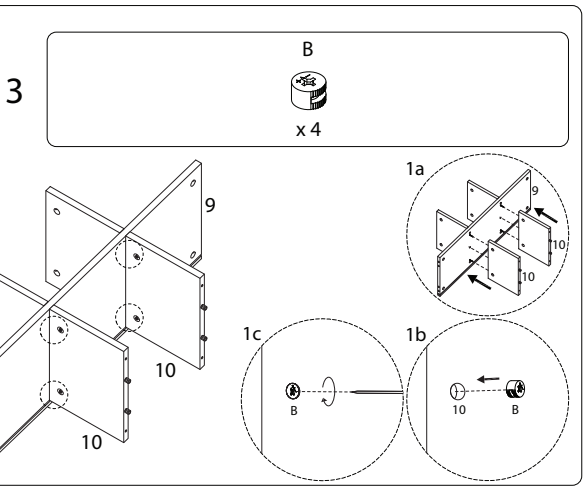

14

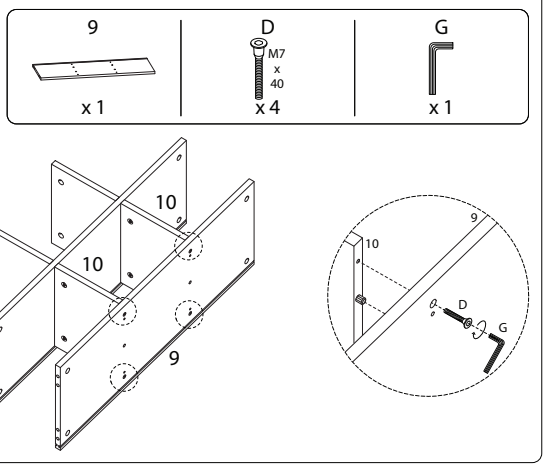

15

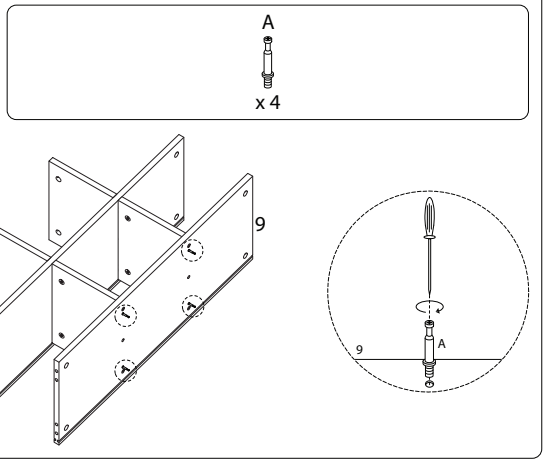

16

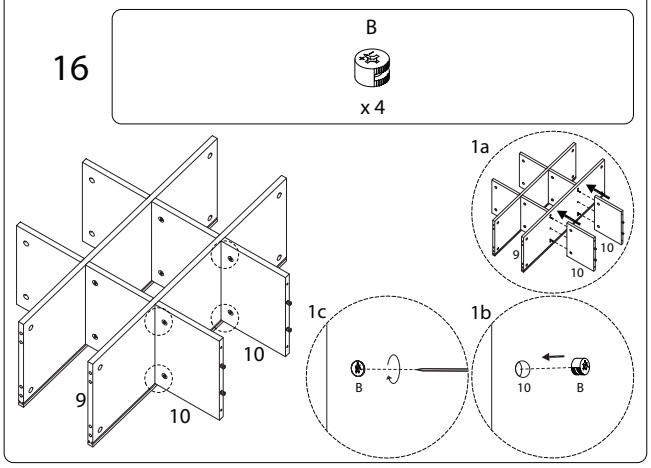

17

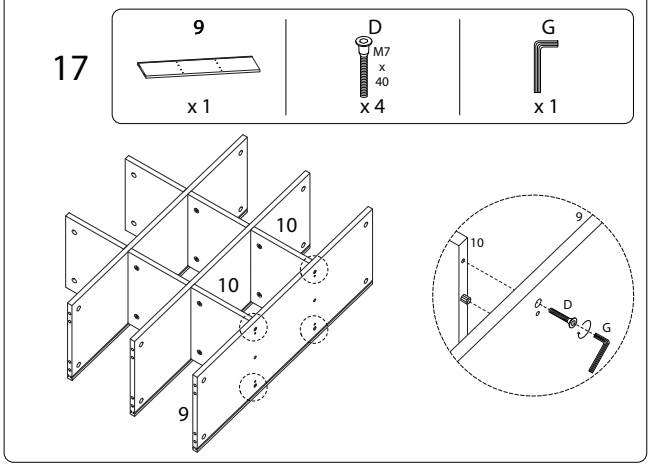

18

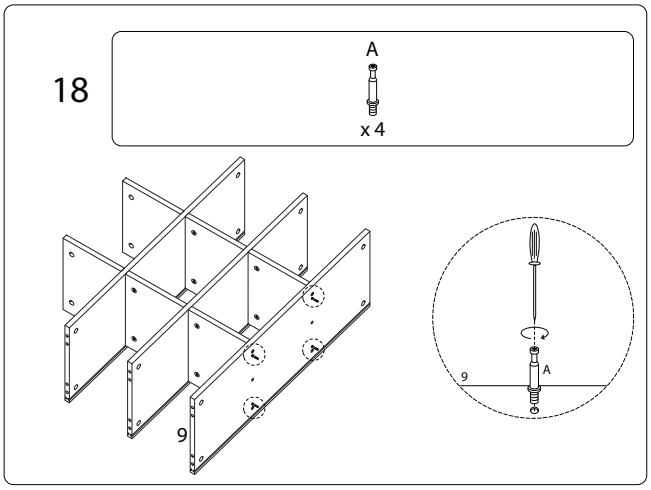

19

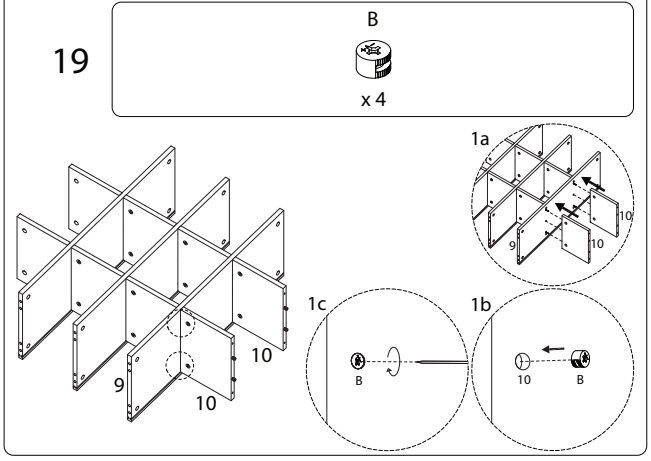

20

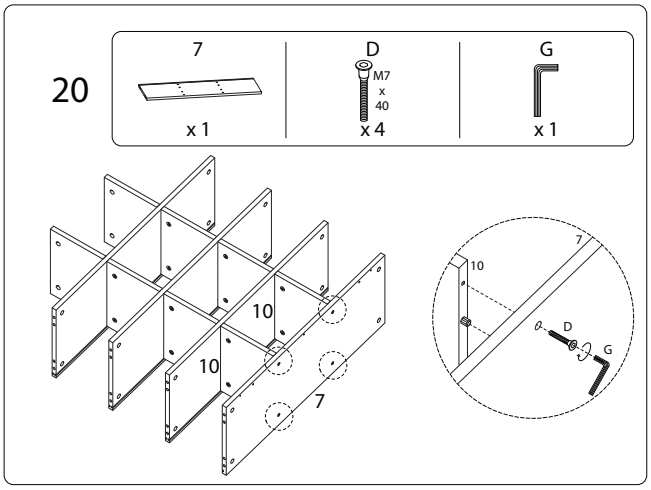

21

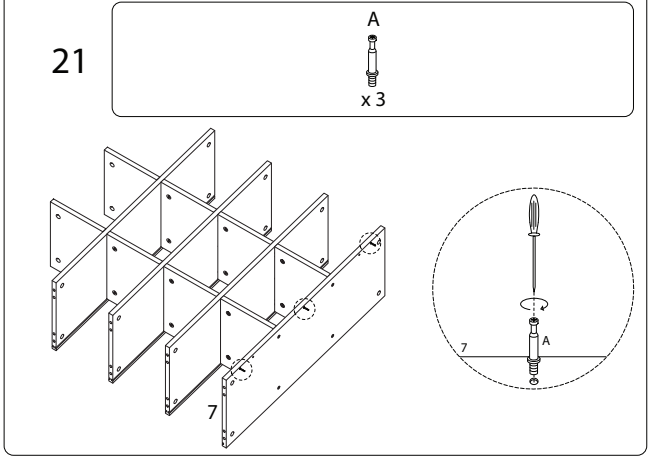

22

B

x 3

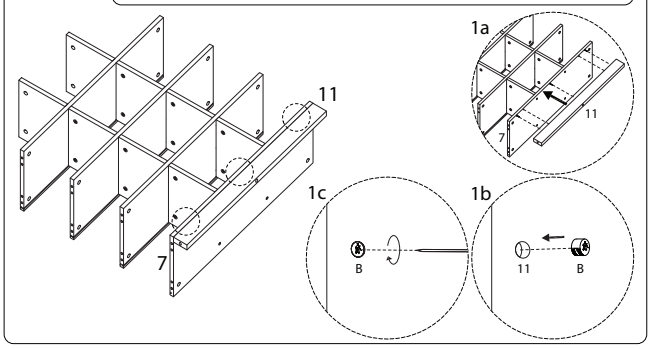

23

C

x 8

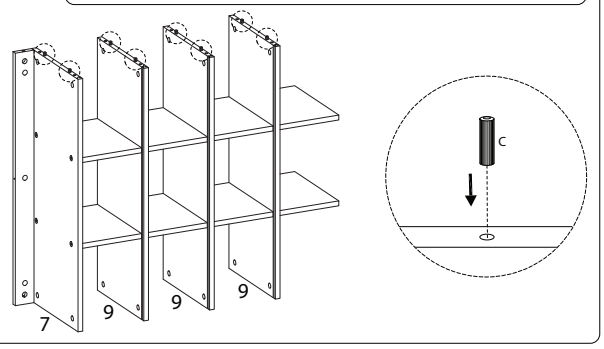

24

B

x 9

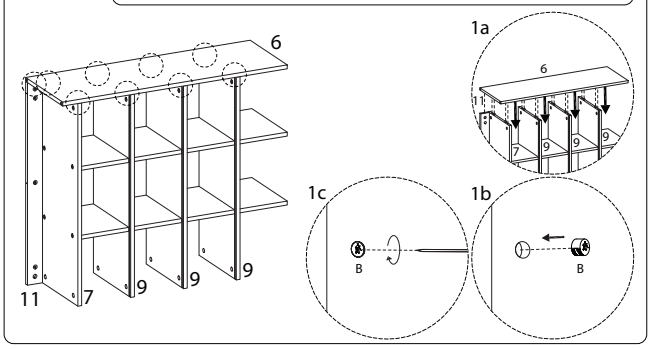

25

13

x 3

C

x 8

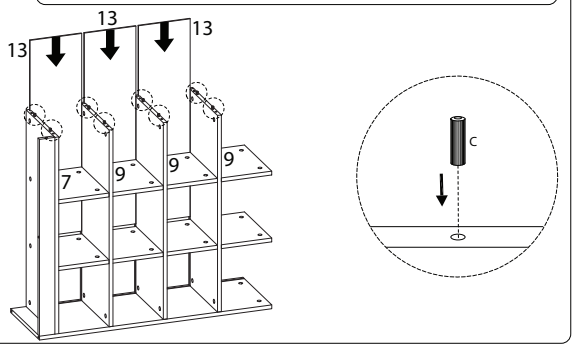

26

B

x 9

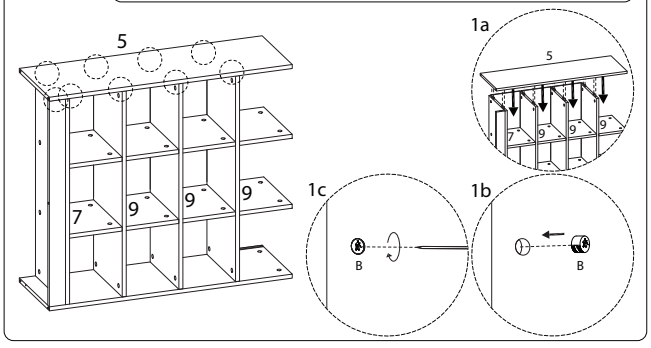

27

13

x 1

C

x 4

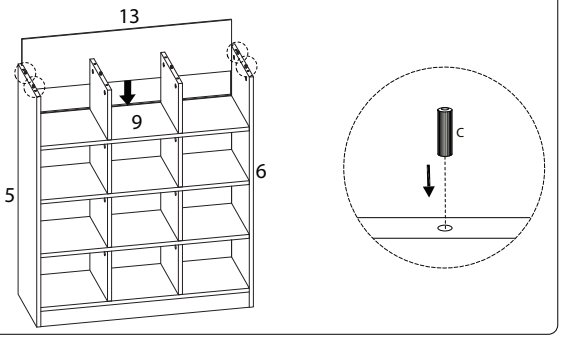

28

B

x 8

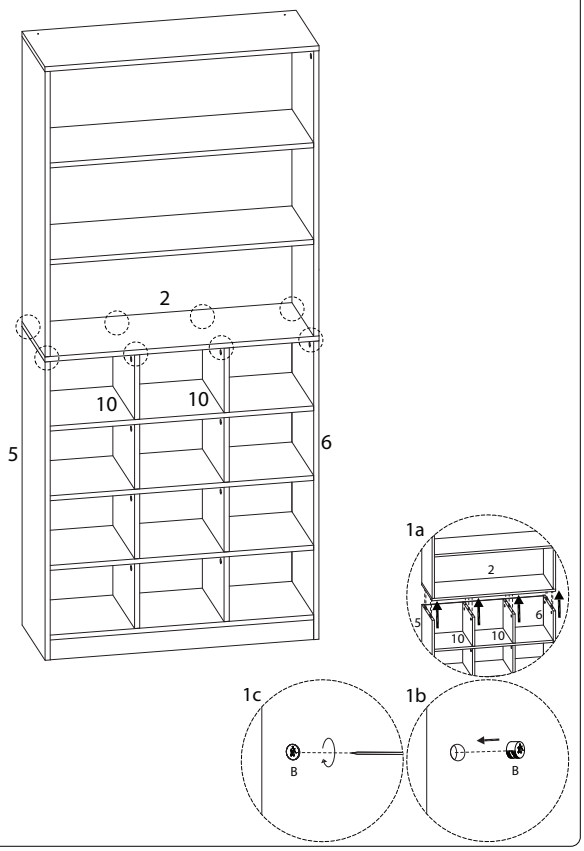

29

I
x 24

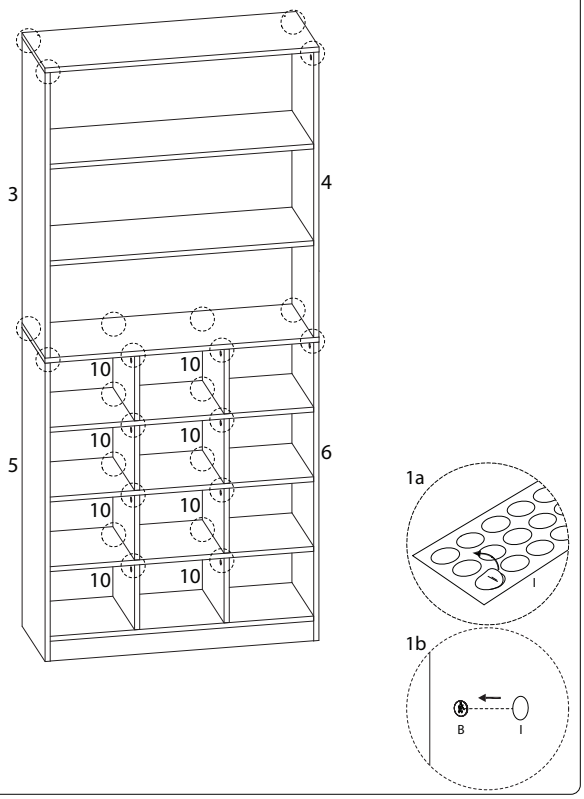

1794/LAJAMANU/300326

30

E	F
M3.5 x 14	
x 28	x 28

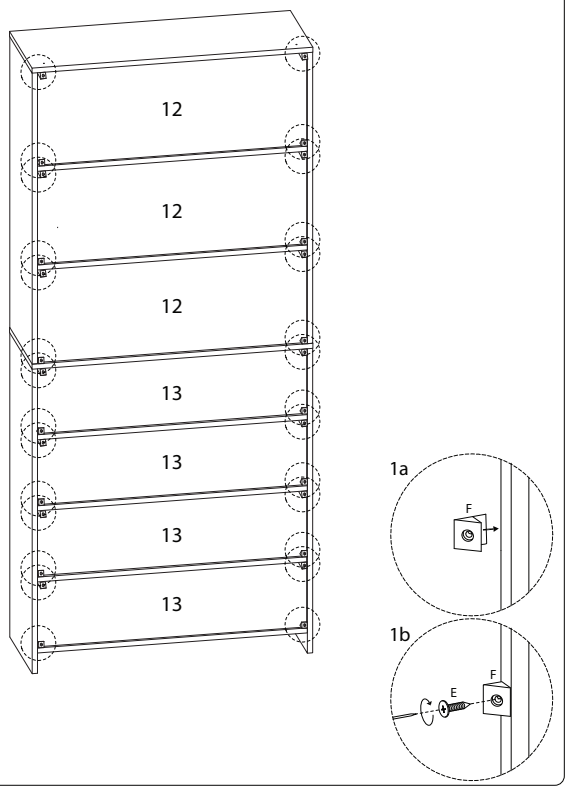

1794/LAJAMANU/300326

31

H1	H2	H3	H4
M4 x 35		M3.5 x 12	
x 2	x 2	x 2	x 2

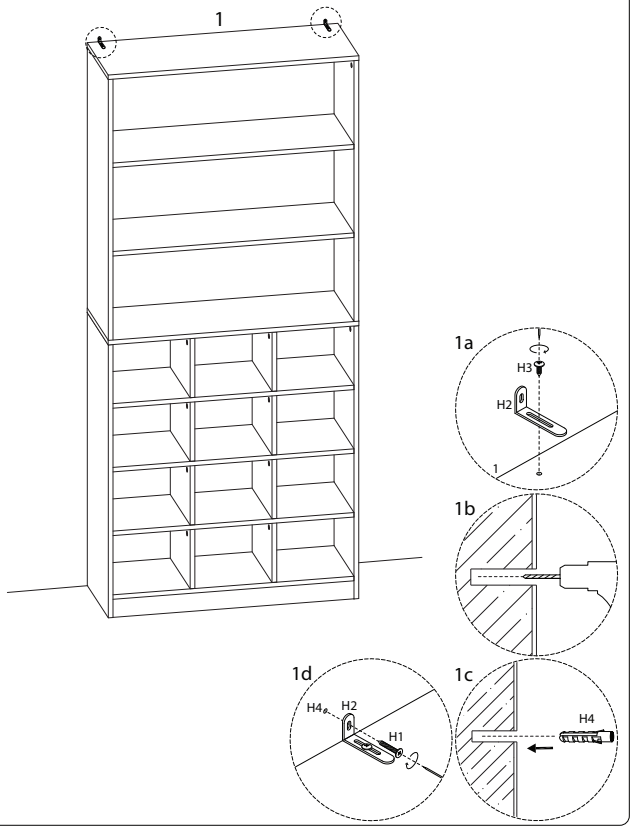

1794/LAJAMANU/300326