OKLAHOMA

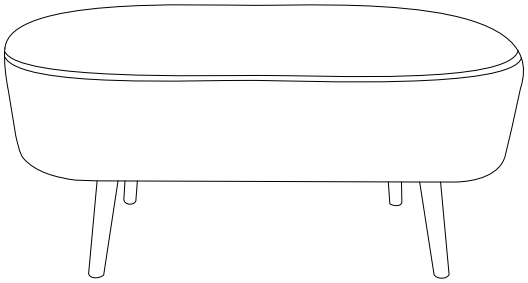

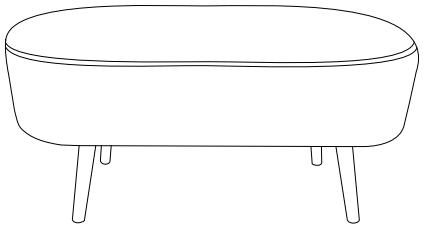

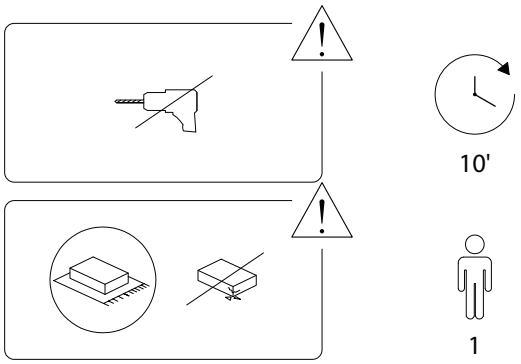

1/3

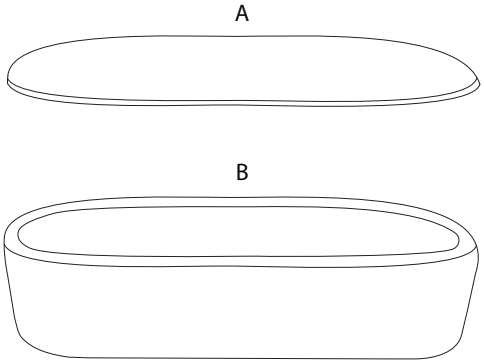

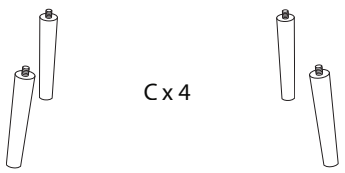

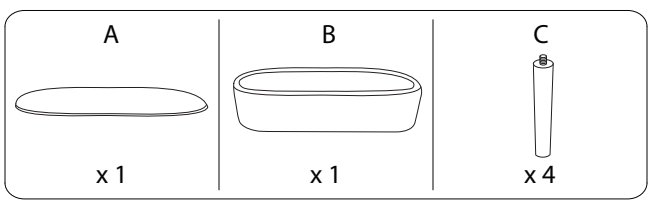

2/3

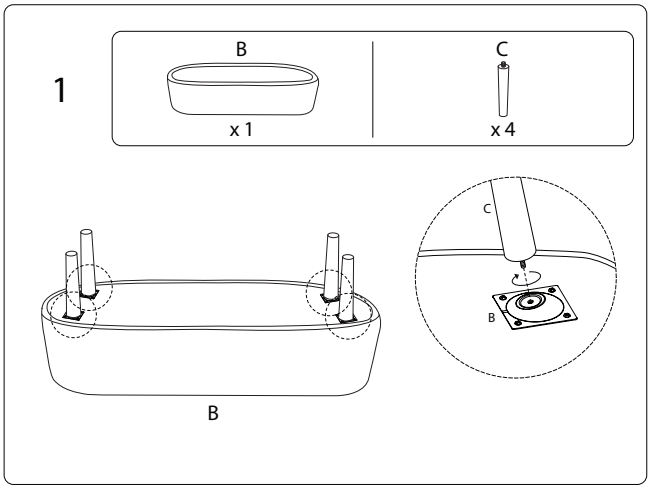

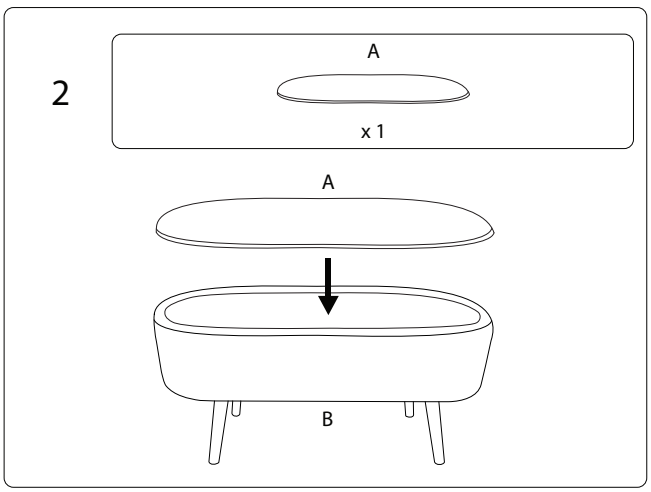

3/3