KAMLOOPS

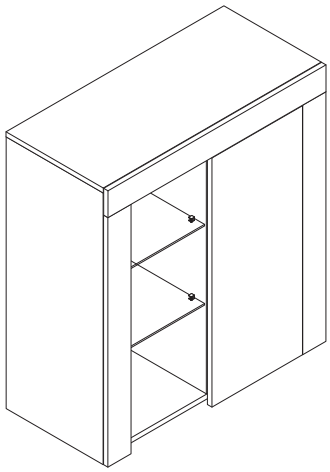

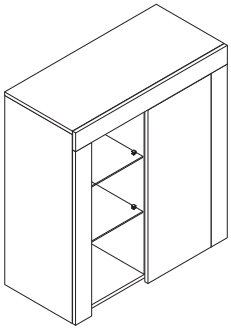

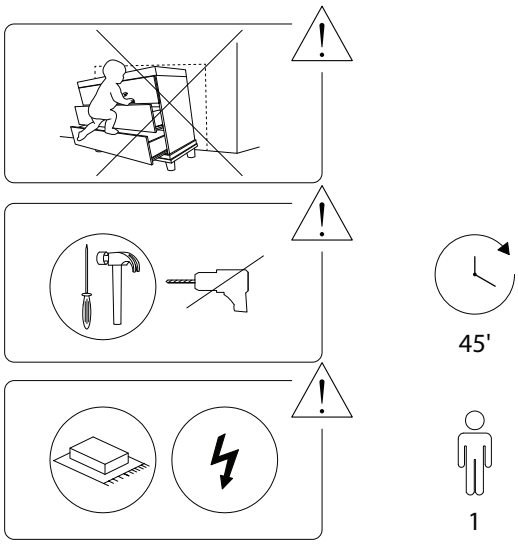
45'
1

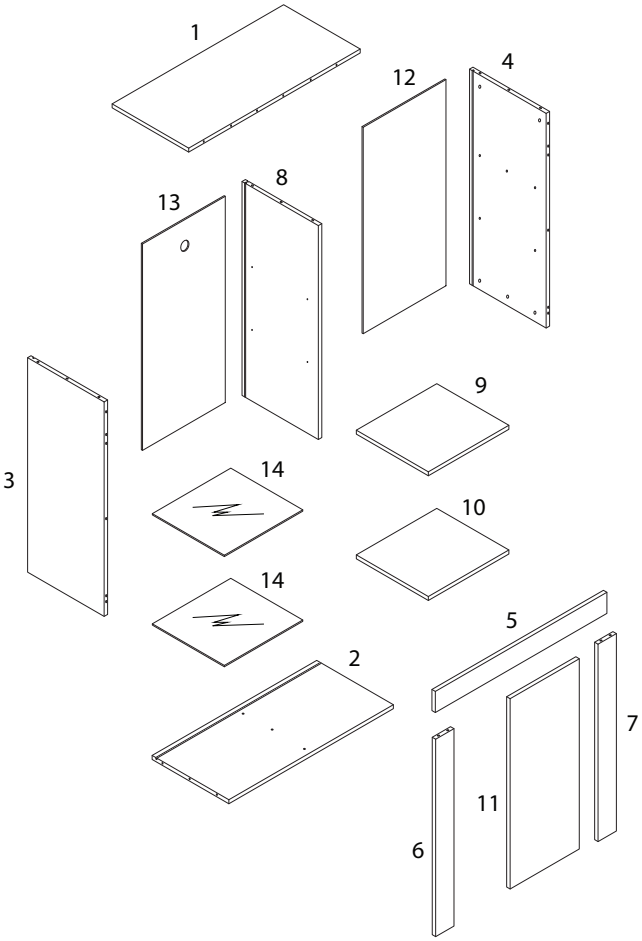
1
12
4
13
8
3
9
14
10
14
5
2
7
11
6

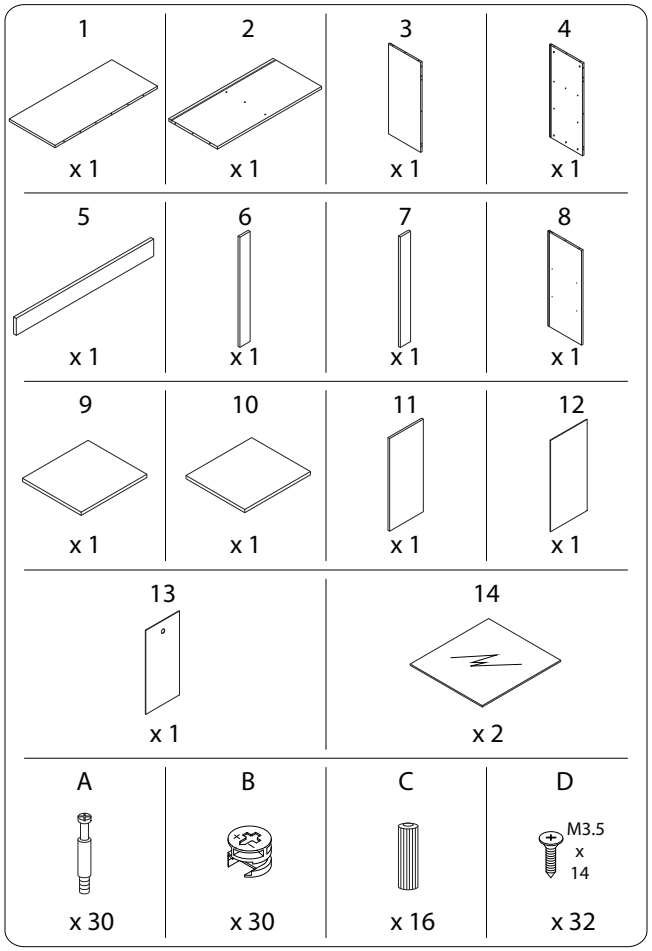
1
x 1
2
x 1
3
x 1
4
x 1
5
x 1
6
x 1
7
x 1
8
x 1
9
x 1
10
x 1
11
x 1
12
x 1
13
x 1
14
x 2
A
x 30
B
x 30
C
x 16
D
M3.5
x
14
x 32

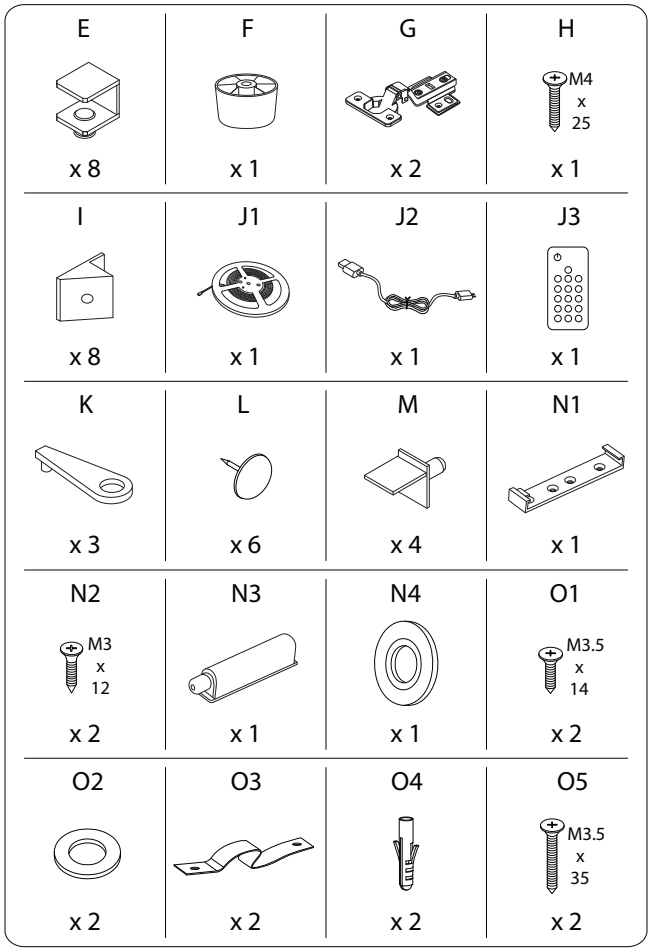
E
x 8
F
x 1
G
x 2
H
M4 x 25
x 1
I
x 8
J1
x 1
J2
x 1
J3
x 1
K
x 3
L
x 6
M
x 4
N1
x 1
N2
M3 x 12
x 2
N3
x 1
N4
x 1
O1
M3.5 x 14
x 2
O2
x 2
O3
x 2
O4
x 2
O5
M3.5 x 35
x 2

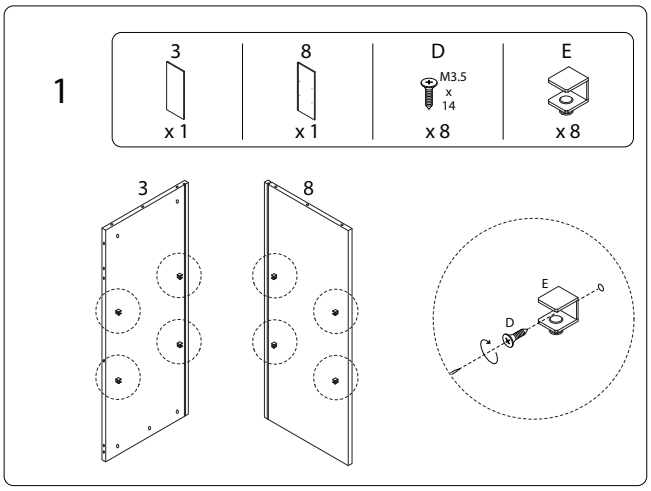
1
3
x 1
8
x 1
D
M3.5 x 14
x 8
E
x 8
3
8
E
D

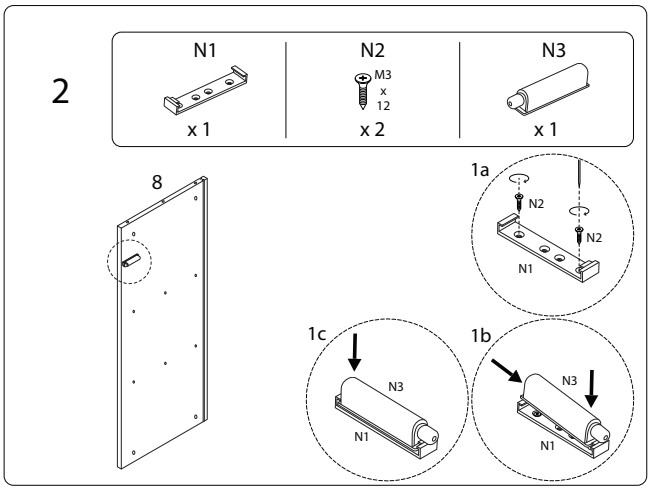
2
N1
x 1
N2
M3 x 12
x 2
N3
x 1
8
1a
N2
N2
N1
1c
N3
N1
1b
N3
N1

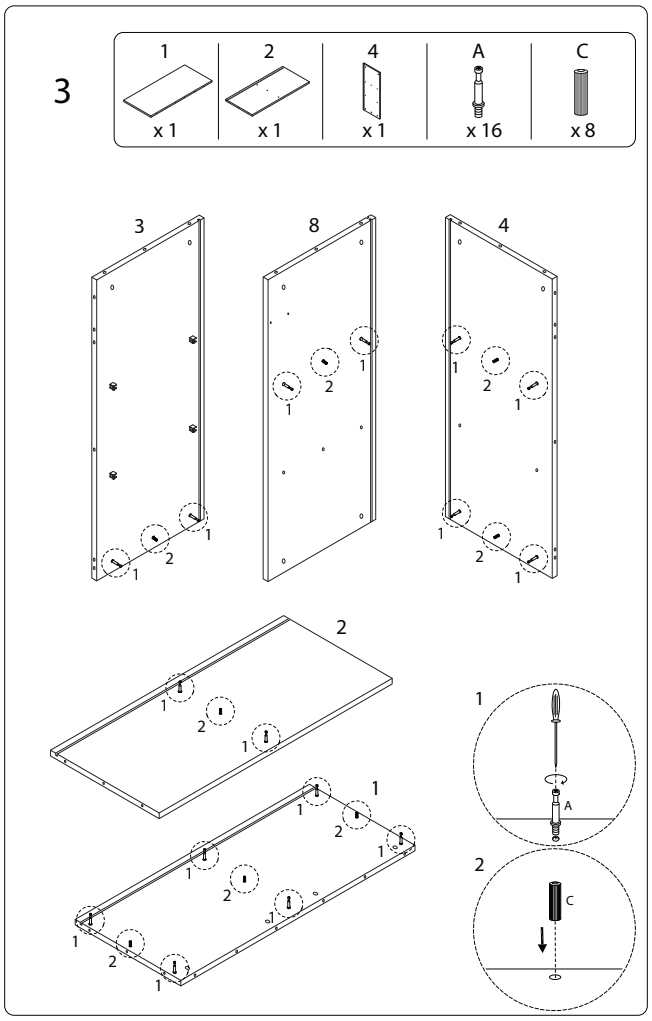
3
1
x 1
2
x 1
4
x 1
A
x 16
C
x 8
3
8
4
2
1
A
2
C

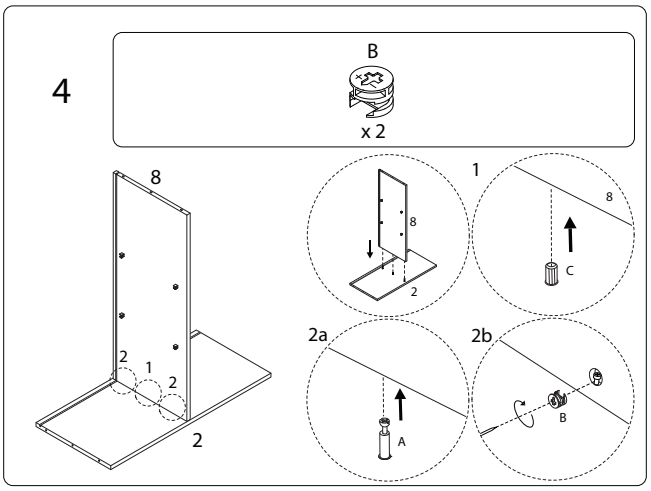
4
B
x 2
8
1
8
C
2a
A
2b
B

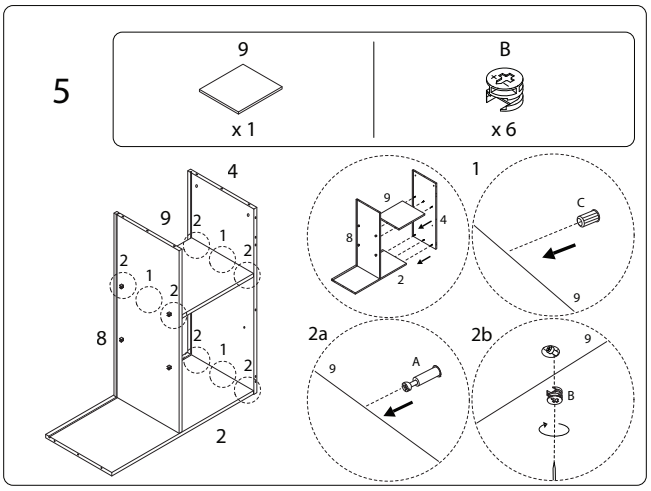
5
9
x 1
B
x 6
4
9
8
1
C
9
2a
A
2b
B

6

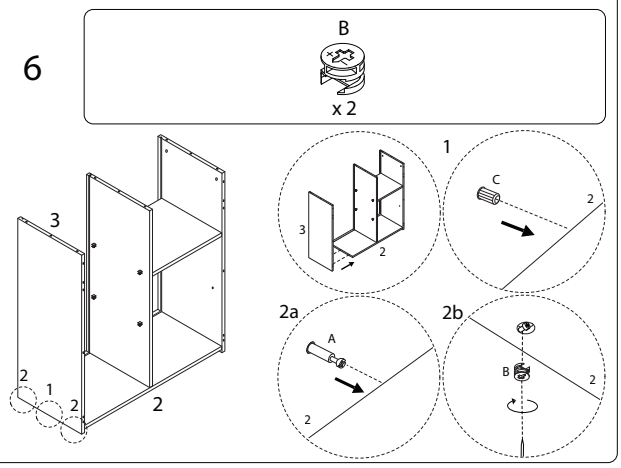

7

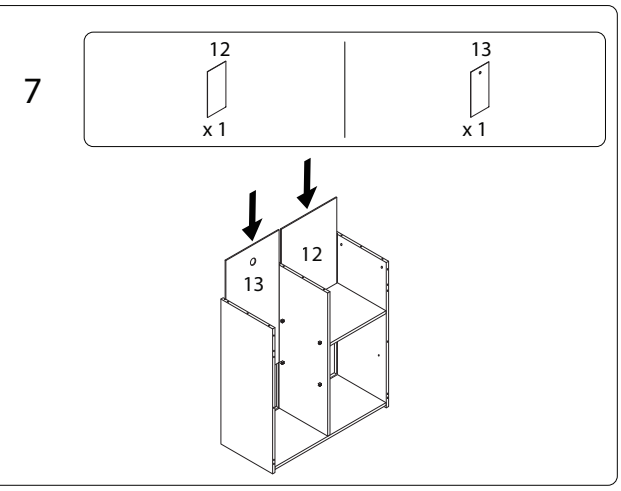

8

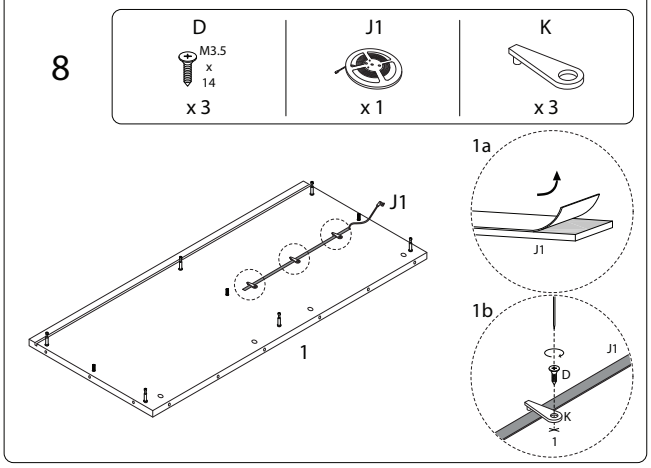

9

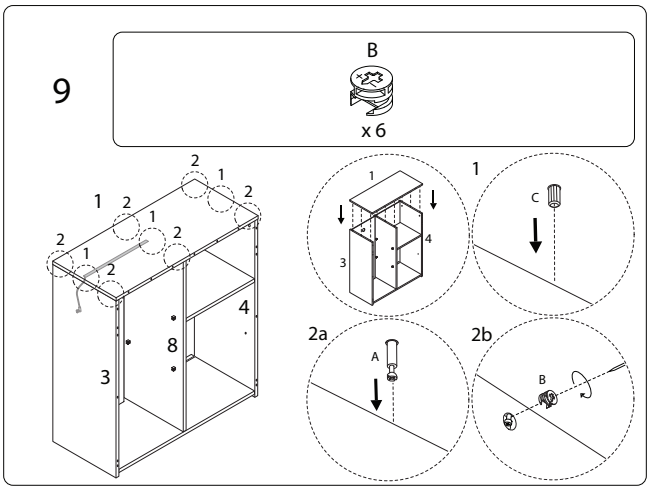

10

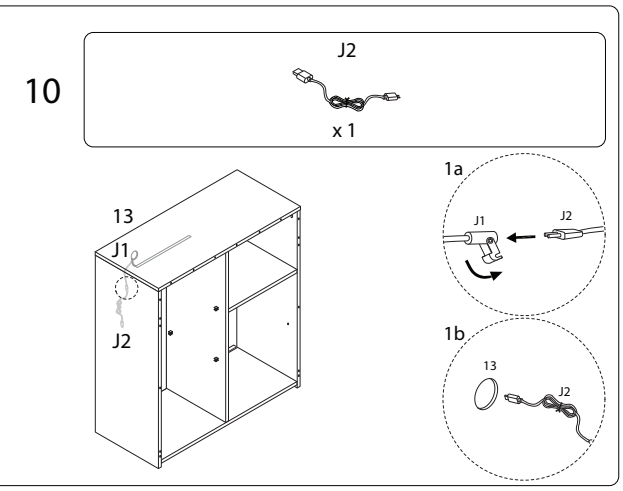

11

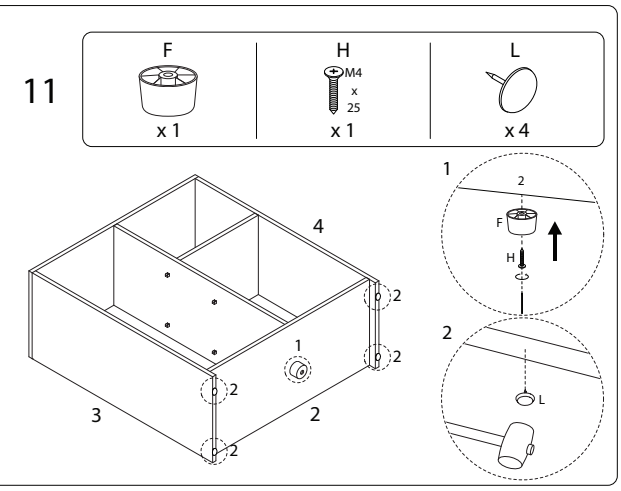

12

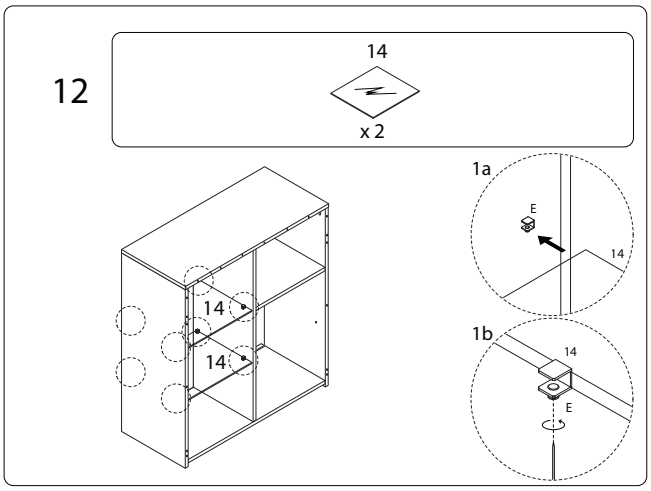

13

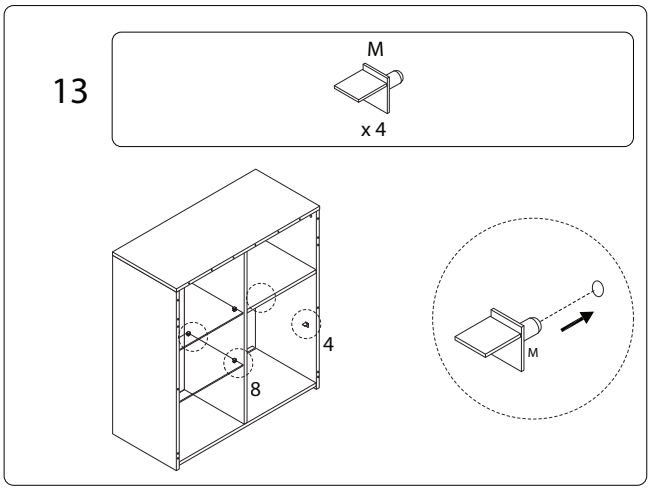

14

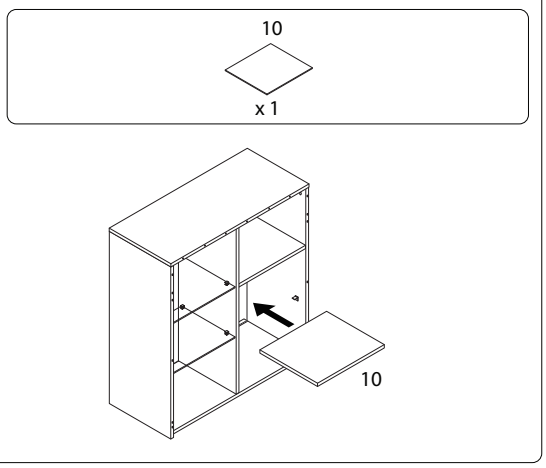

15

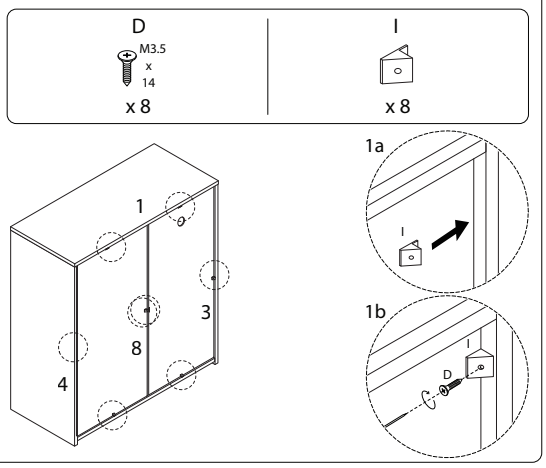

16

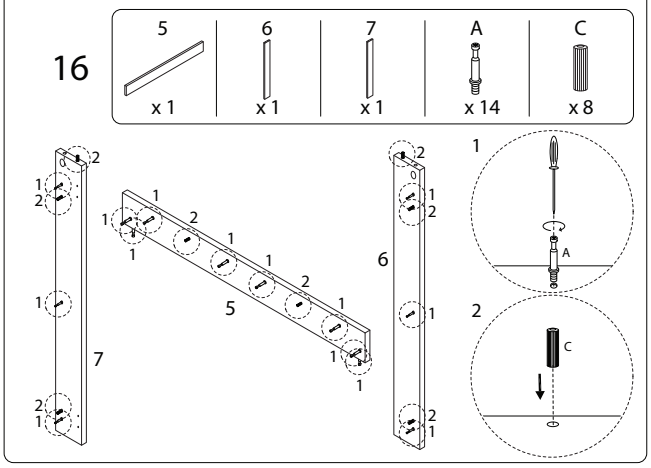

17

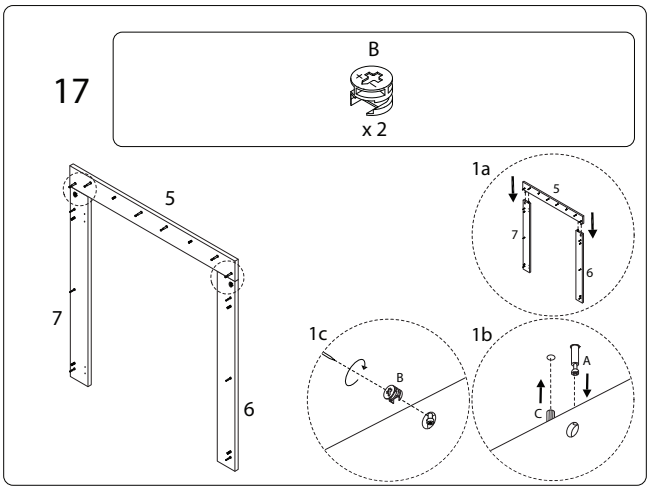

18

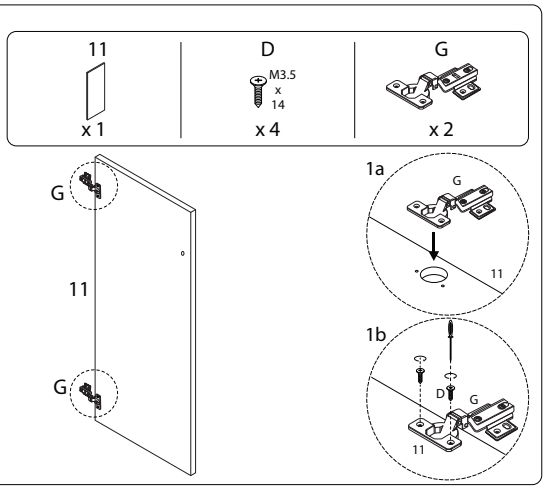

19

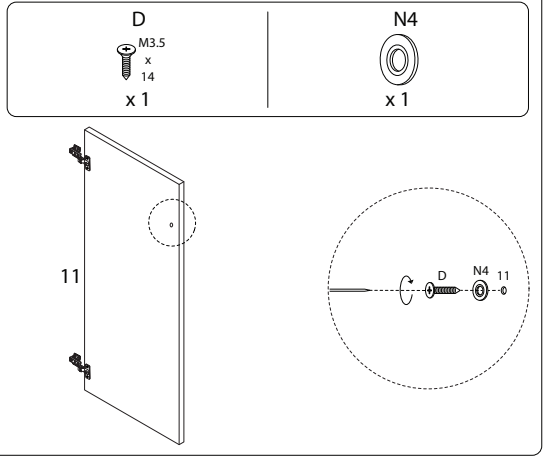

20

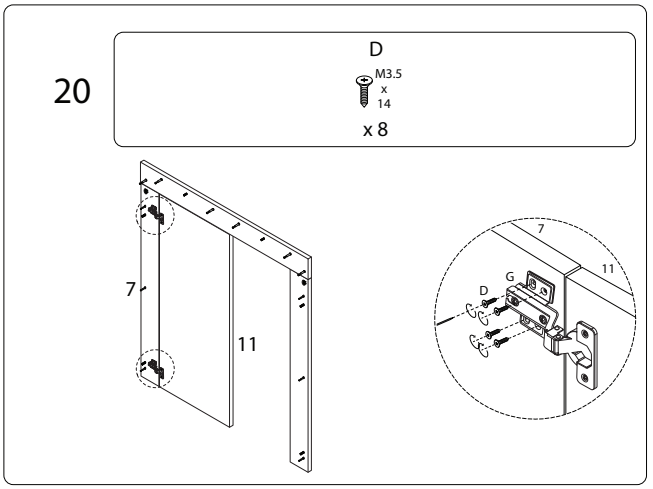

21

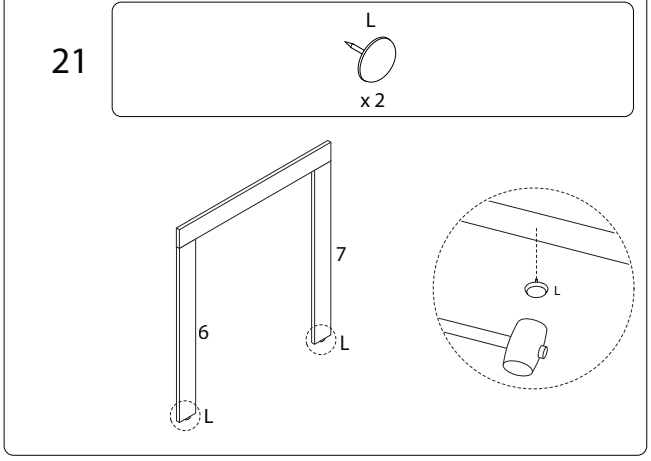

22

B

x 12

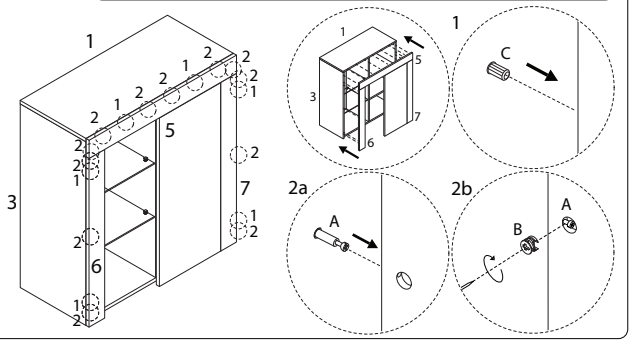

23

O1	O2	O3
M3.5 x 14		
x 2	x 2	x 2

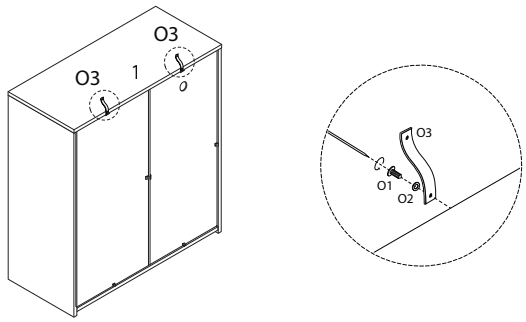

24

O4	O5
	M3.5 x 35
x 2	x 2

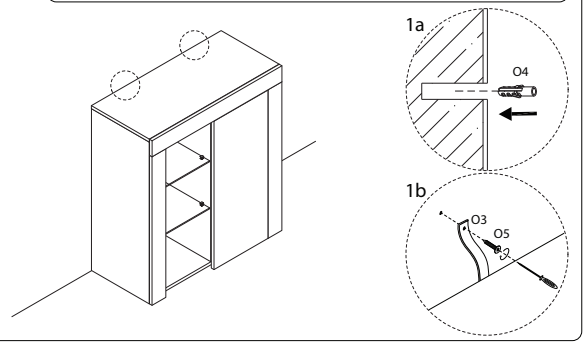

!

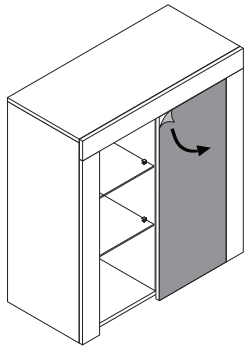

!

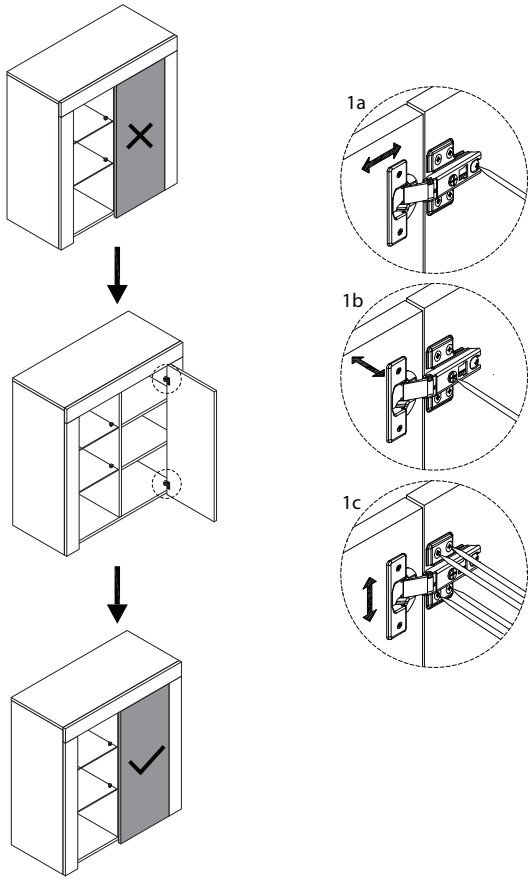

!

J3
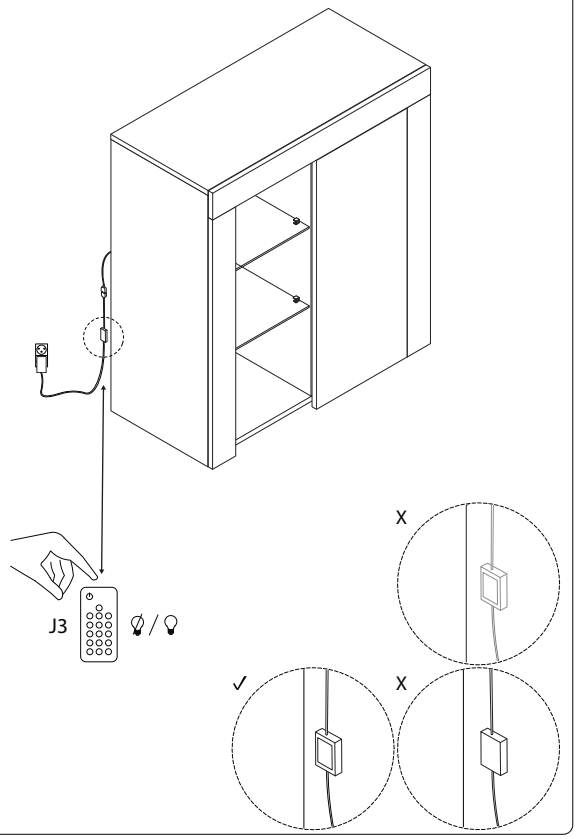
x 1