SHILLINGTON

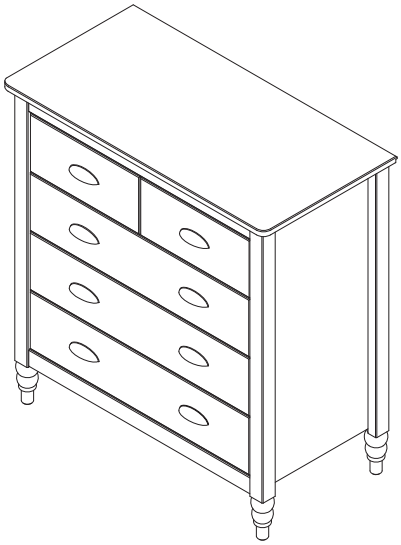

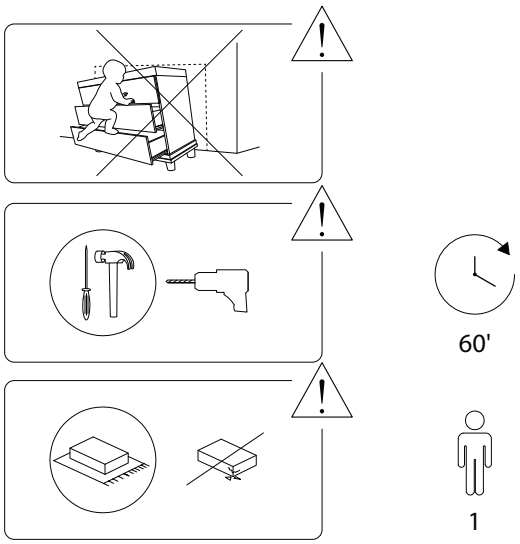

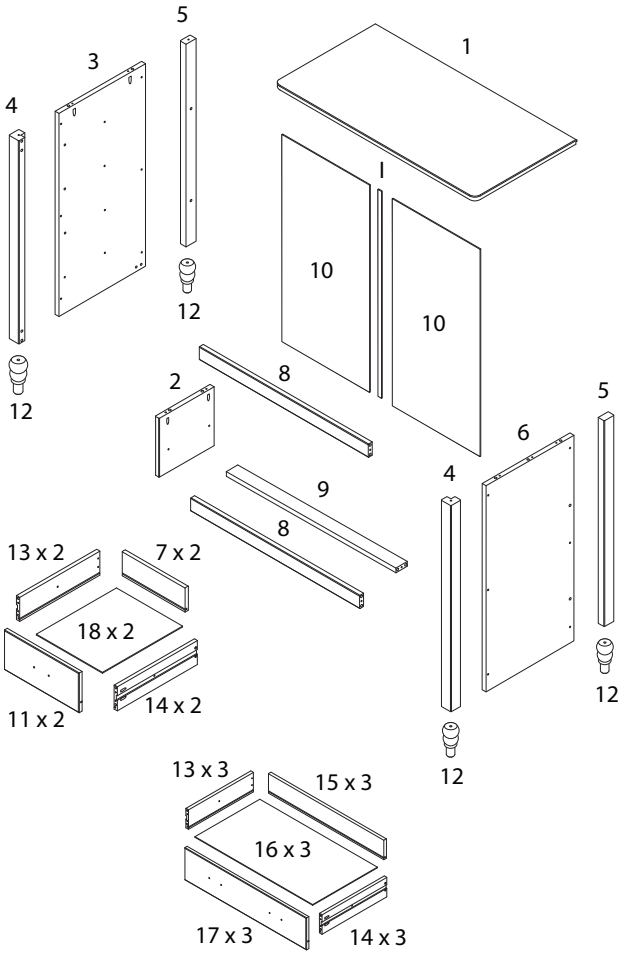

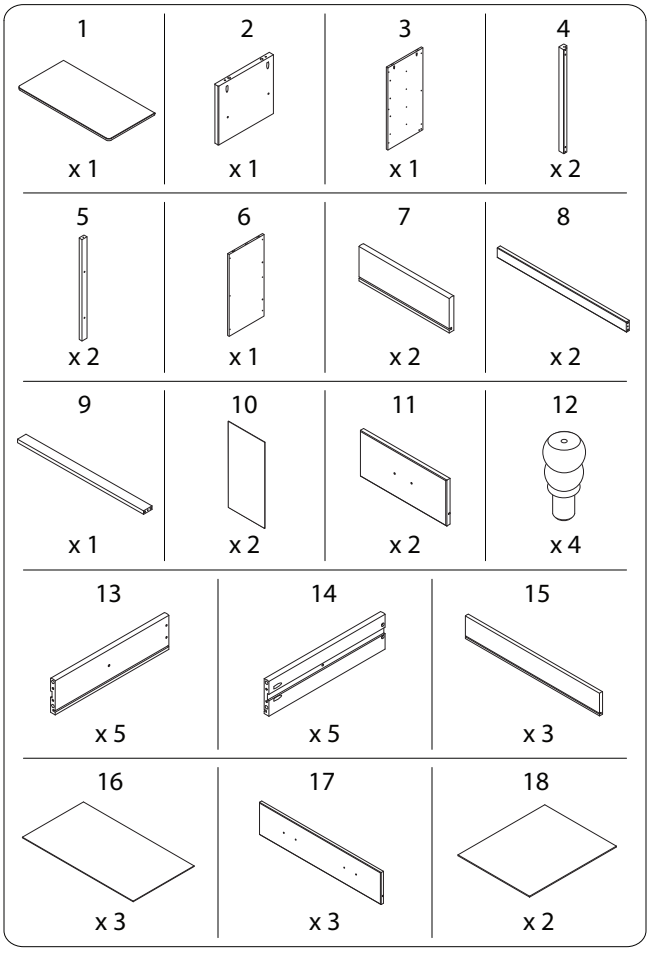

A	B	C
x 42	M4 x 30 x 64	M6 x 10 x 16
D	**E**	**F**
M4 x 11 x 10	M4 x 20 x 16	x 24
G	**H**	**I**
x 8	x 10	x 1
J	**K**	**L**
x 4	M6 x 20 x 4	x 2
M	**N**	**O**
x 1	M3.5 x 14 x 1	M7 x 58 x 4

1

2	3	6	A
x 1	x 1	x 1	x 6

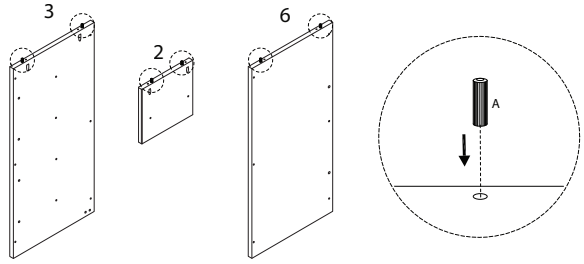

2

5	A
x 2	x 4

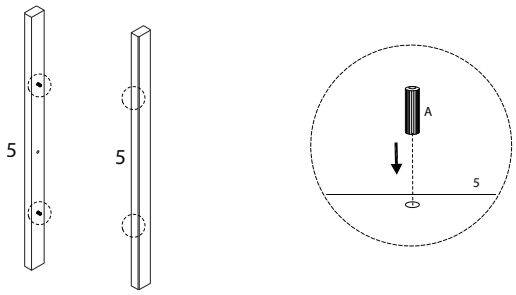

3

8	9	A
x 2	x 1	x 11

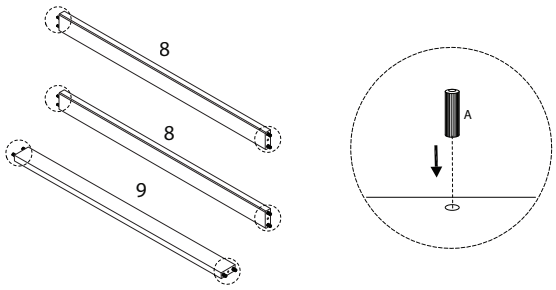

4 x 5

13	14	A
x 1	x 1	x 4

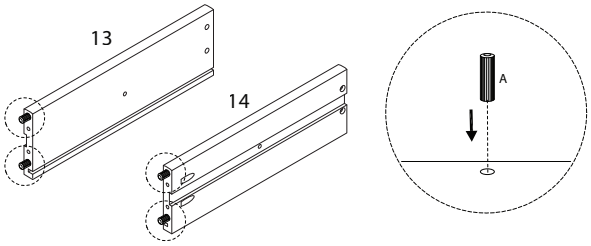

5

C	H
M6 x 10 x 11	x 8

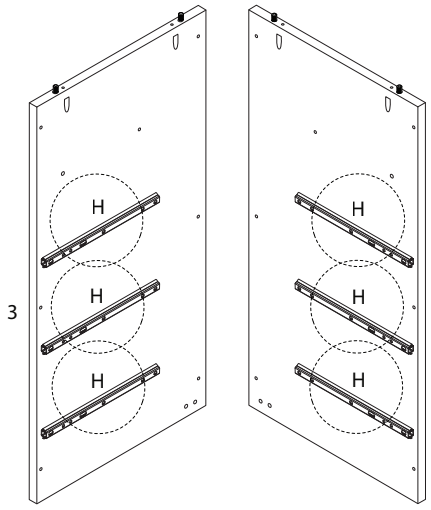

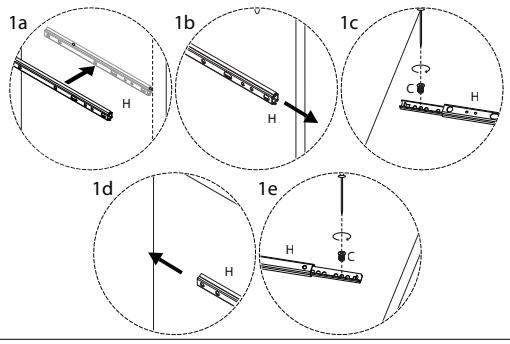

6

K	H	J
M6 x 20		
x 4	x 2	x 4

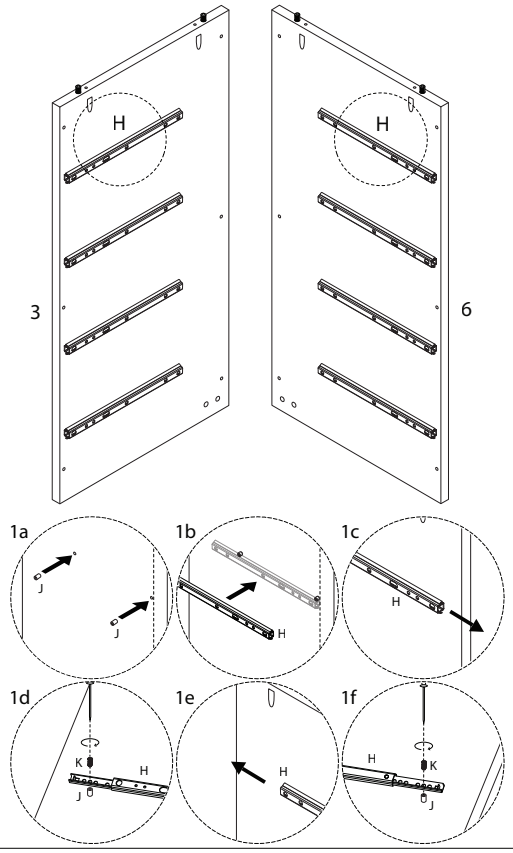

7

4	B
	M4 x 30
x 2	x 11

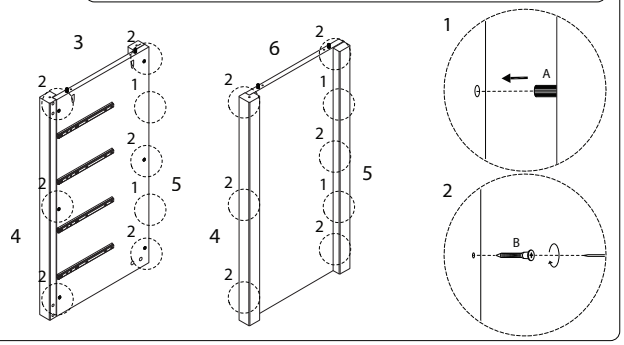

8 x 4

12	O
	M7 x 58
x 1	x 1

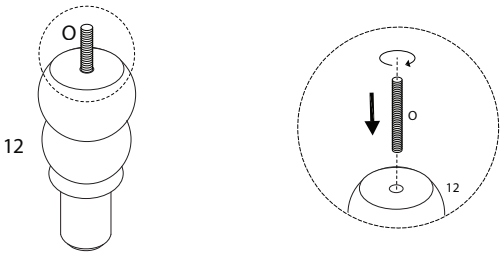

9

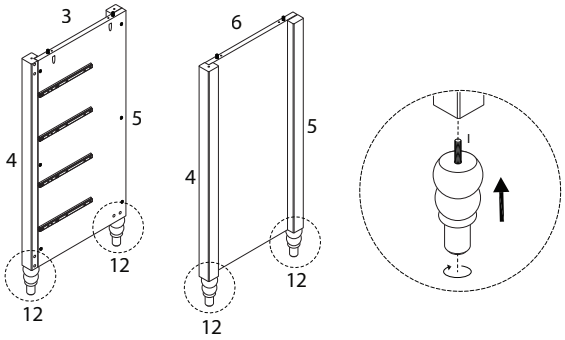

10

C	H
M6 x 10	
x 4	x 2

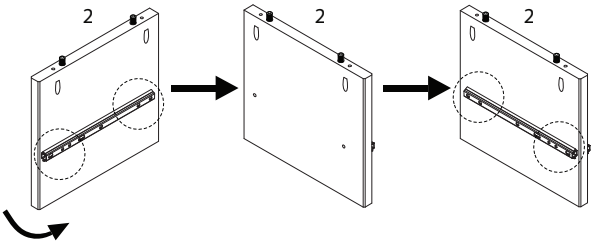

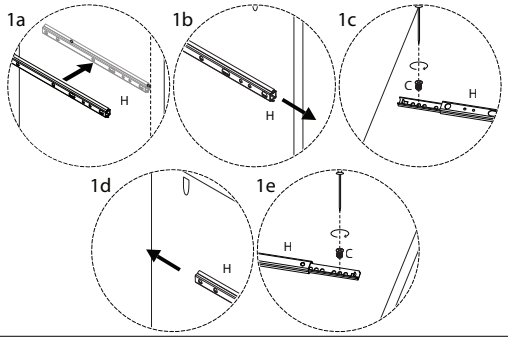

11

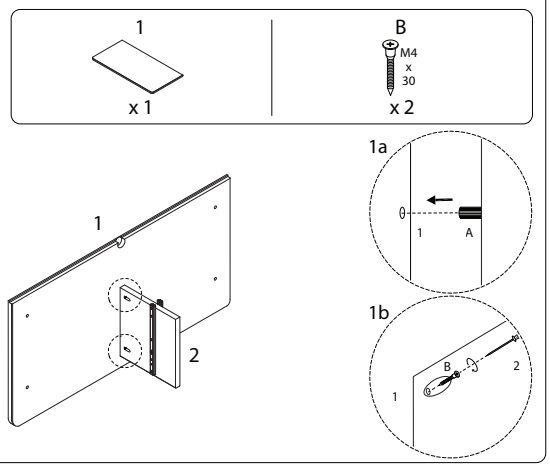

12

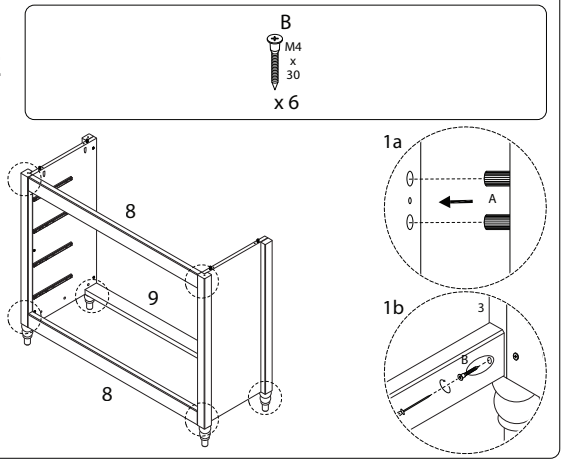

13

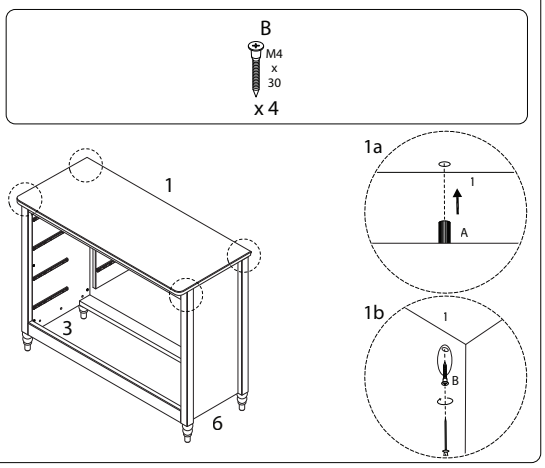

14

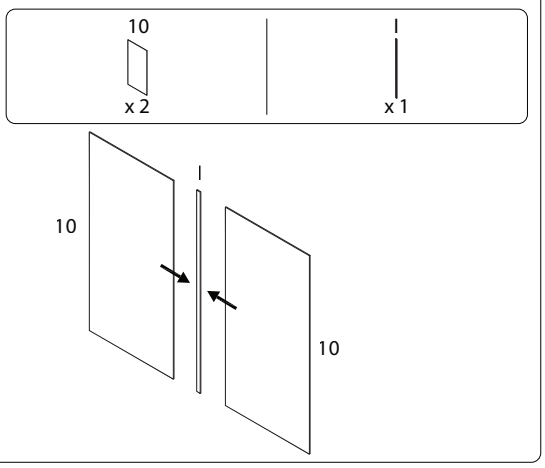

15

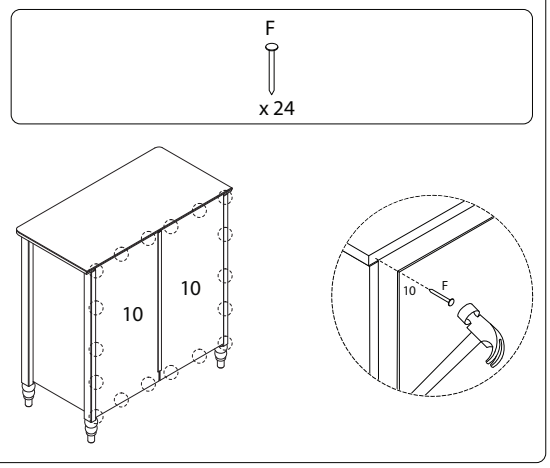

16

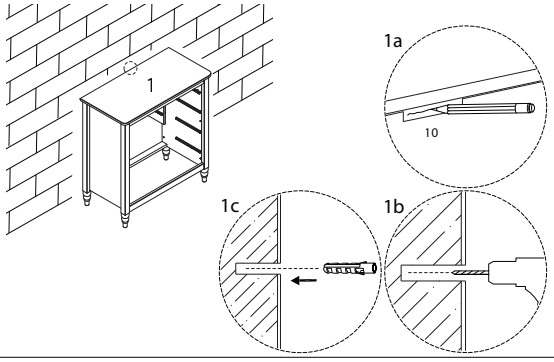

17

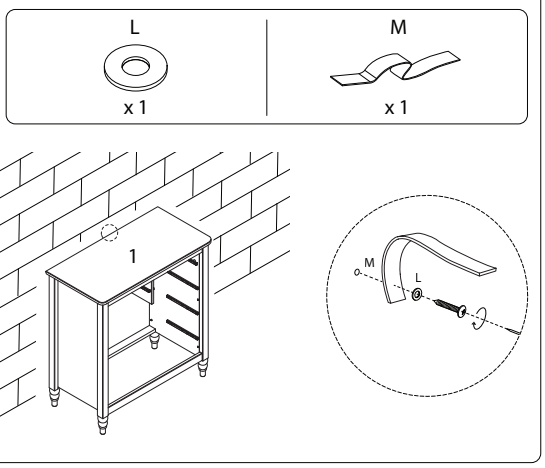

18

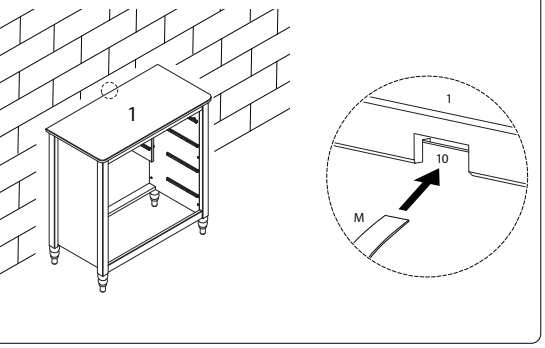

19

L	N
x 1	M3.5 x 14 x 1

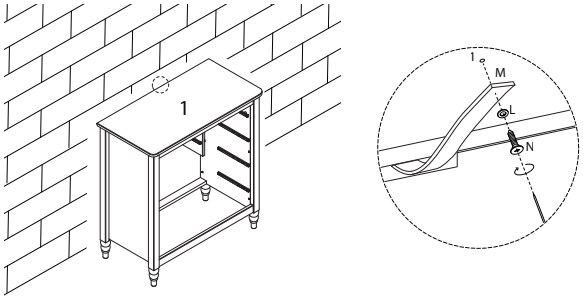

20 x 2

11	13	14	B
x 1	x 1	x 1	M4 x 30 x 4

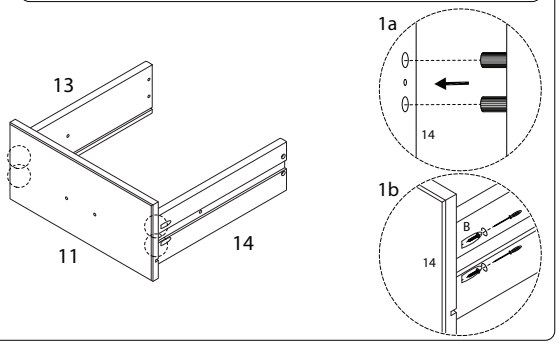

21 x 2

18
x 1

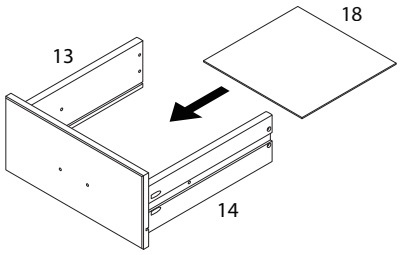

22 x 2

7	B
x 1	M4 x 30 x 4

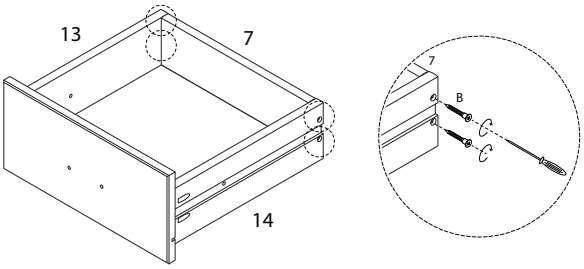

23 x 3

13	14	17	B
x 1	x 1	x 1	M4 x 30 x 4

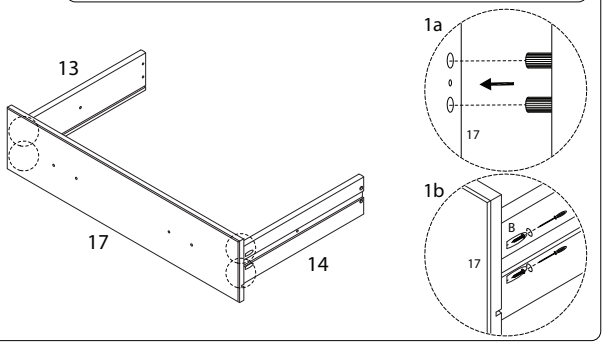

24 x 3

16
x 1

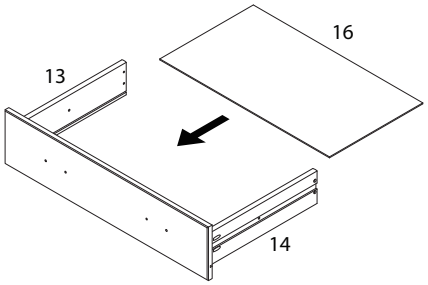

25 x 3

15	B
x 1	M4 x 30 x 4

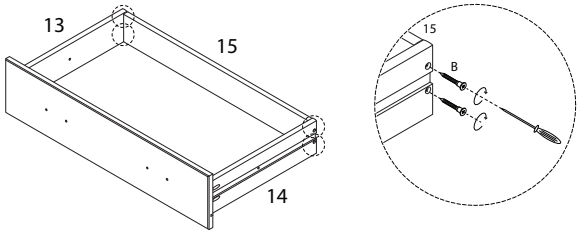

26 x 2

E	G
M4 x 20 x 2	x 1

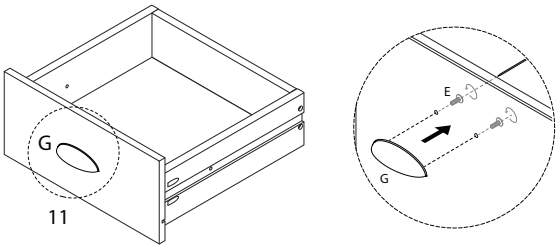

27 x 3

E	G
M4 x 20	
x 2	x 1

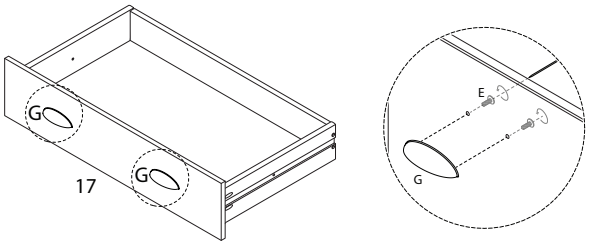

28

D
M4 x 11
x 10

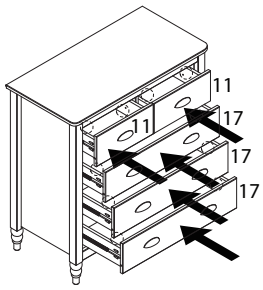

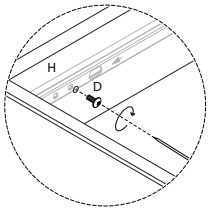

2545/SHILLINGTON/160726/