ISHOJ

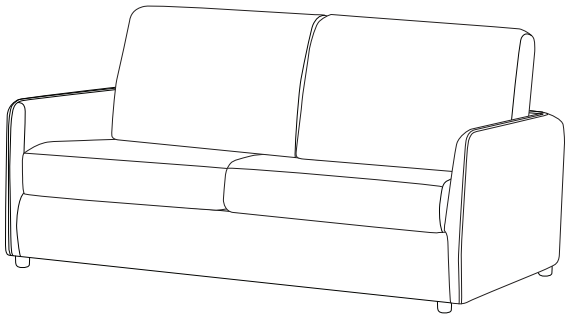

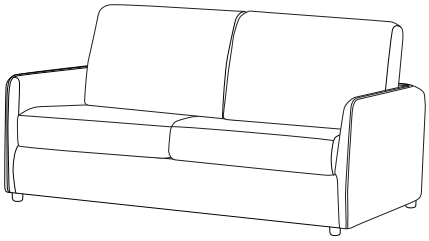

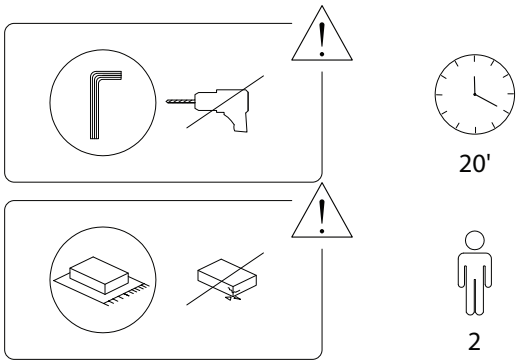

1/5

600/ISHOJ/090824/

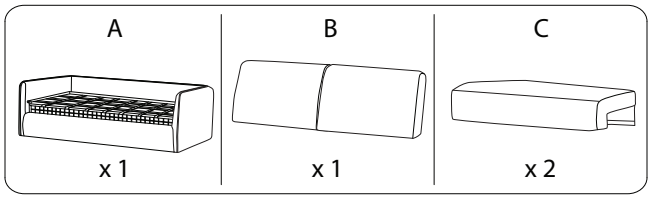

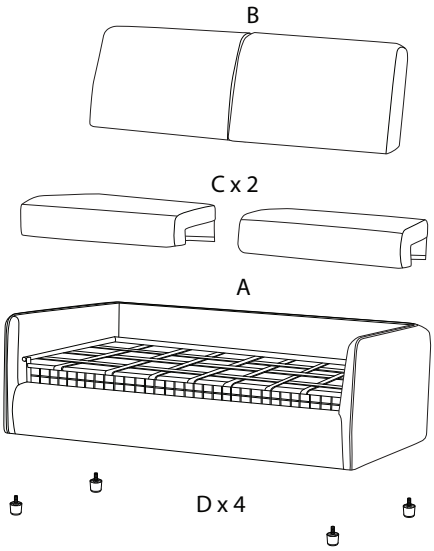

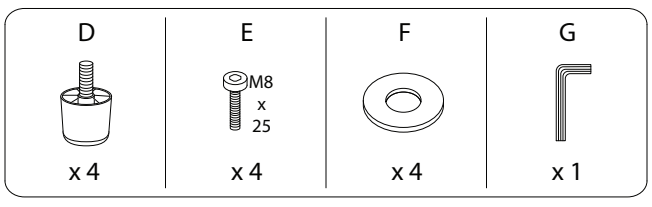

2/5

600/ISHOJ/090824/

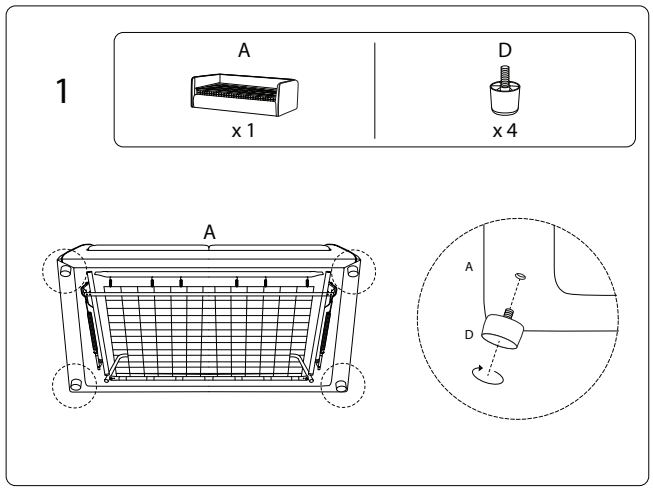

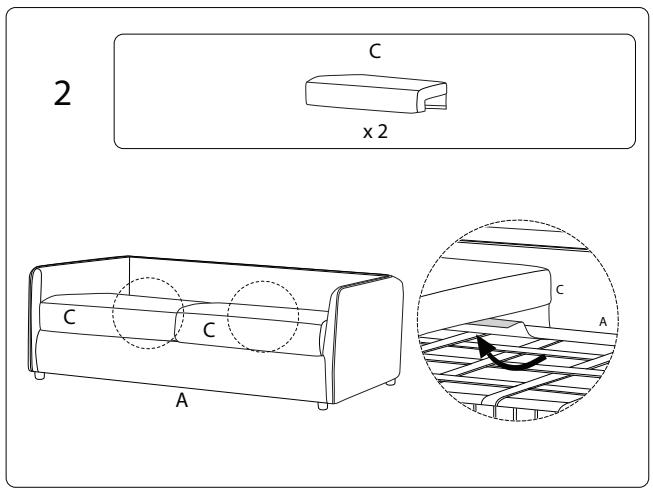

3/5

600/ISHOJ/090824/

3

B	E	F	G
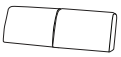			
x 1	x 4	x 4	x 1

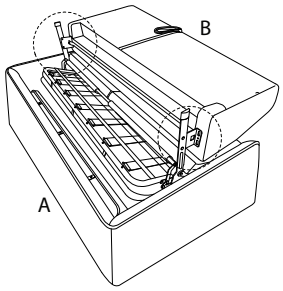

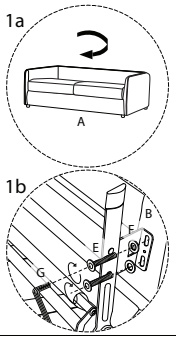

!

