PUILAR

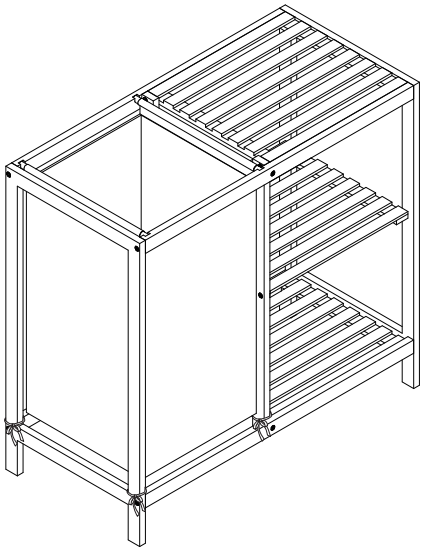

1/7

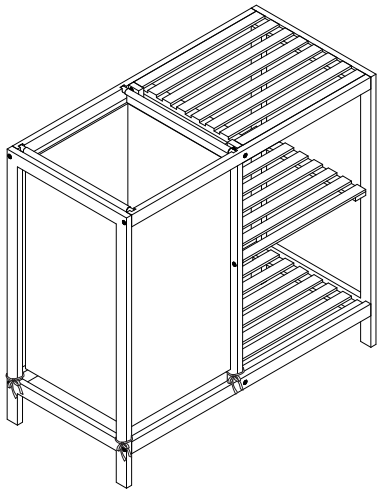

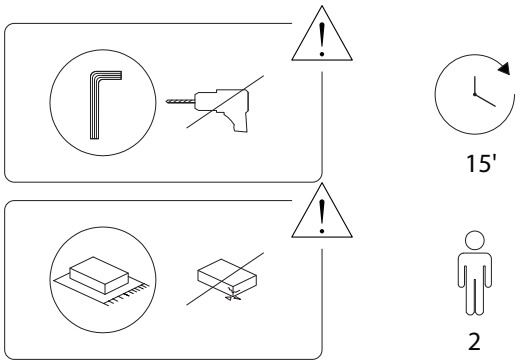

2/7

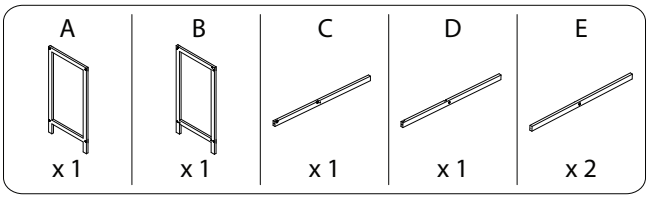

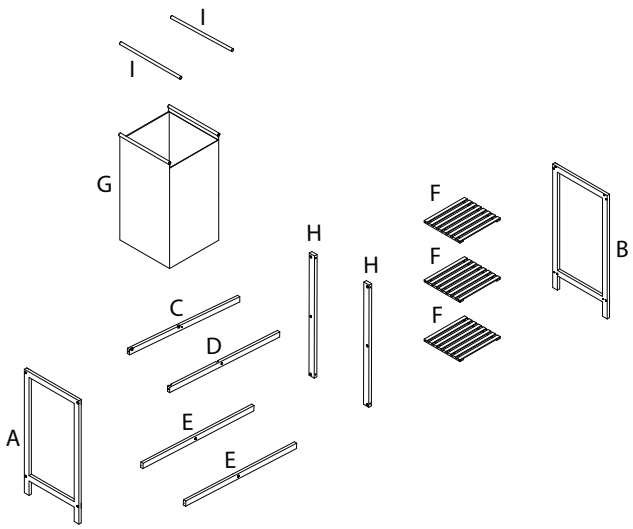

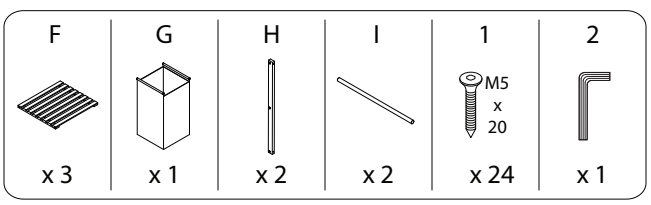

3/7

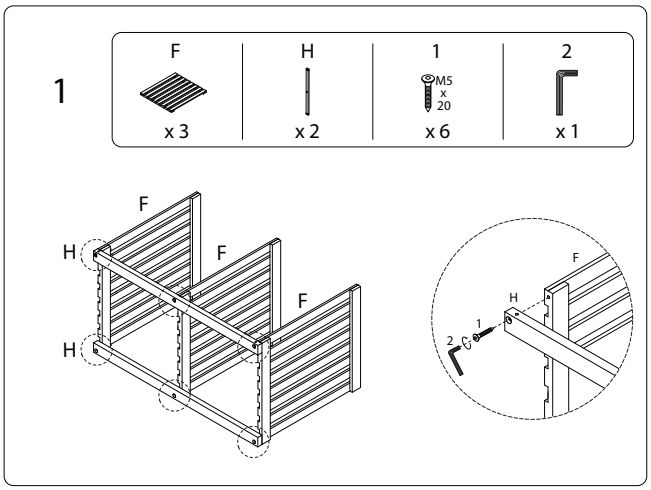

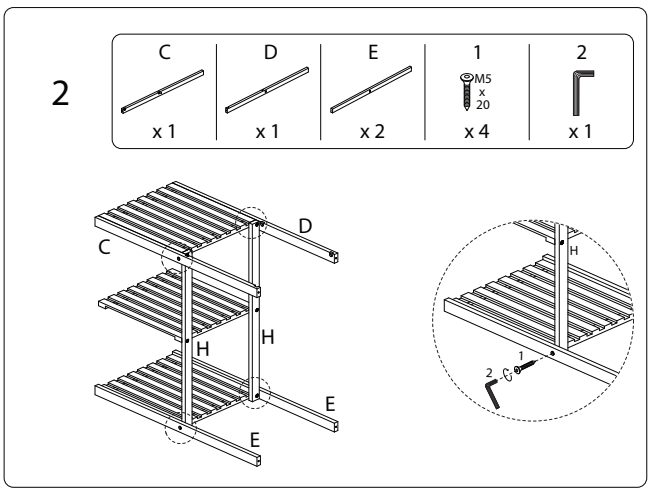

4/7

3

A	1	2
x 1	M5 x 20 x 4	x 1

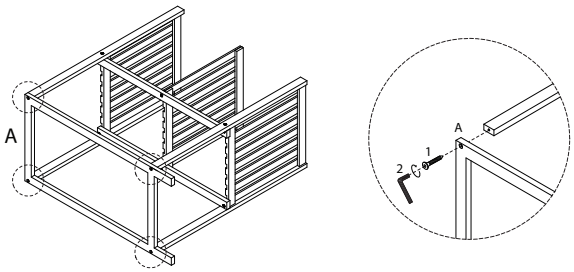

4

B	1	2
x 1	M5 x 20 x 10	x 1

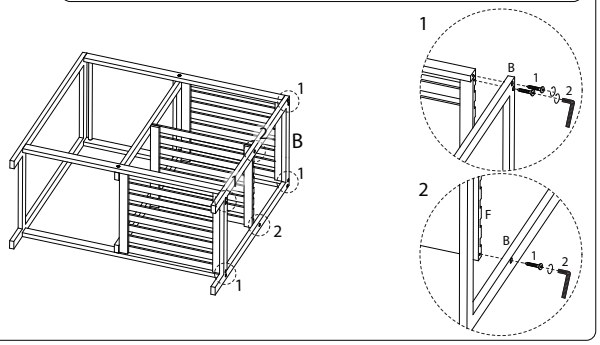

5

G	I
x 1	x 2

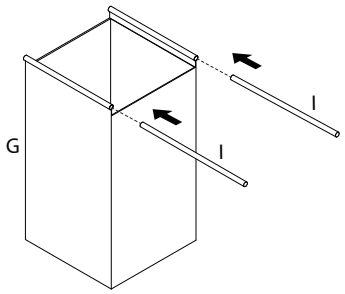

6

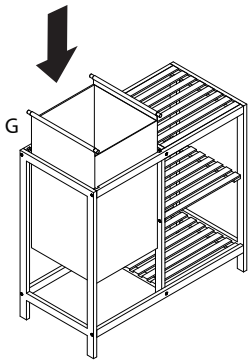

7

