CLARBEC

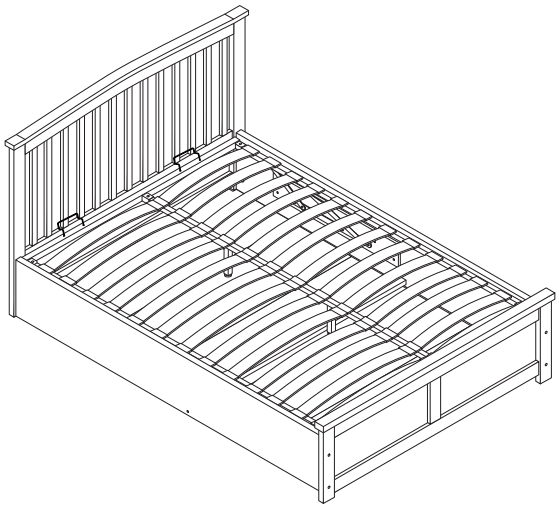

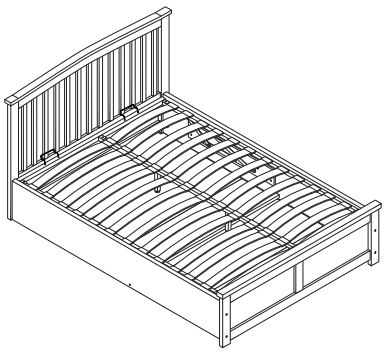

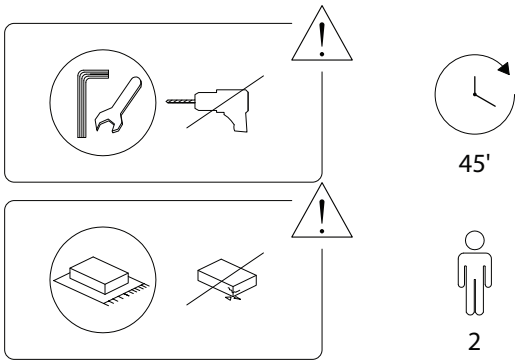

1/14

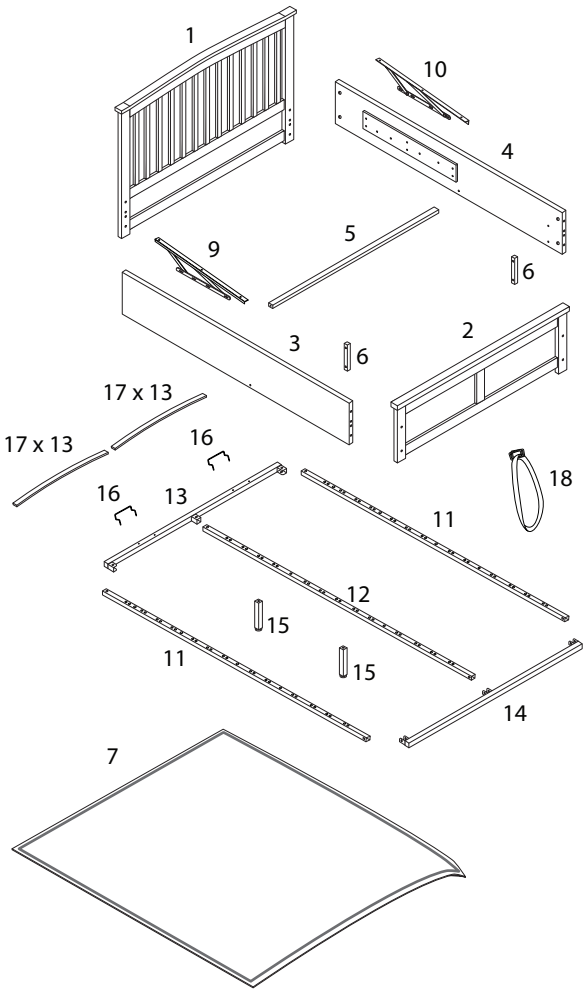

2/14

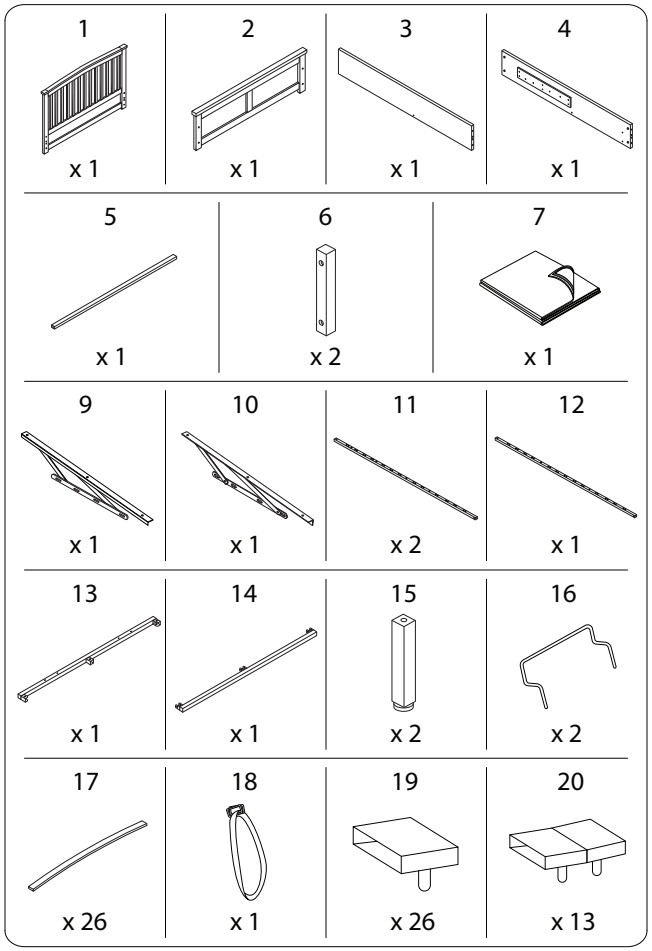

3/14

A	B	C	D
	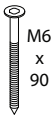		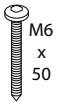
x 8	x 8	x 8	x 4
E	**F**	**G**	**H_1**
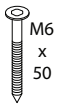			
x 2	x 14	x 12	x 8
H_2	**H_3**	**I**	**J**
			
x 8	x 8	x 1	x 1
K		**L**	
			
x 10		x 1	

1

3	4	A
		
x 1	x 1	x 8

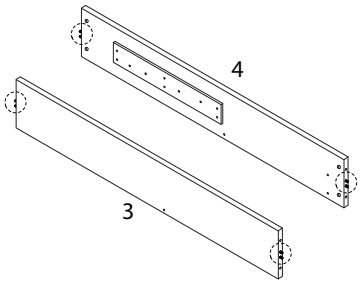

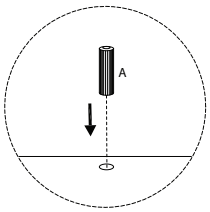

2

6	D	I
		
x 2	x 4	x 1

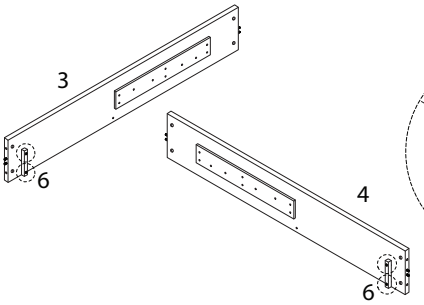

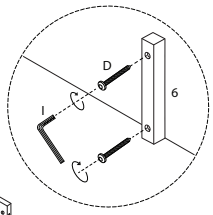

3

1	2	B	C	I
				
x 1	x 1	x 8	x 8	x 1

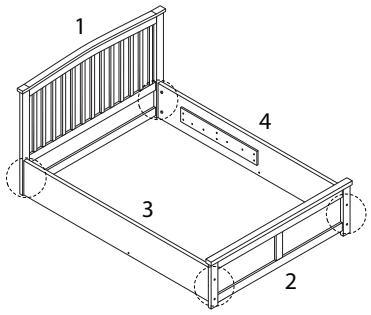

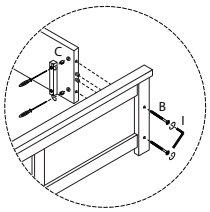

5

5	E	I
		
x 1	x 2	x 1

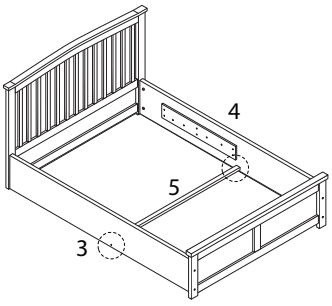

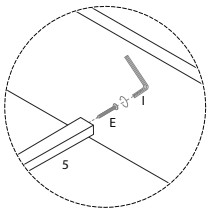

4

7

x 1

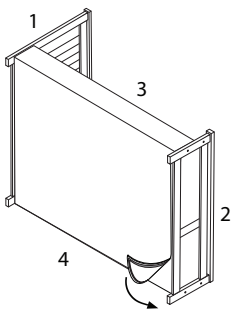

6

9	10	H_1	H_2	H_3	J
					
x 1	x 1	x 8	x 8	x 8	x 1

7

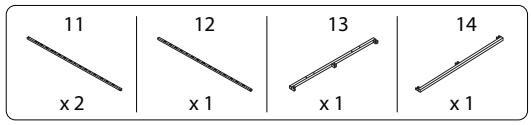

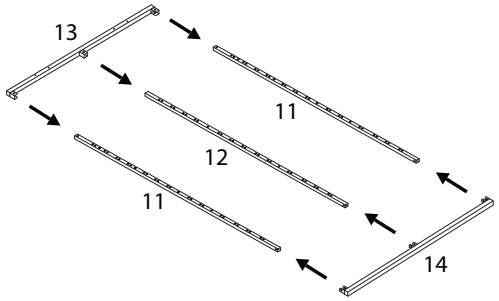

8

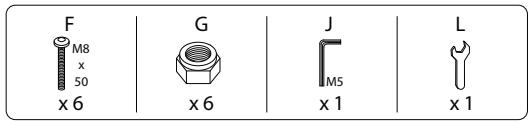

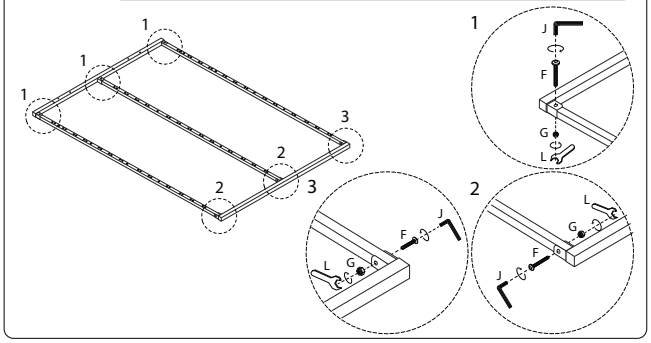

8/14

9

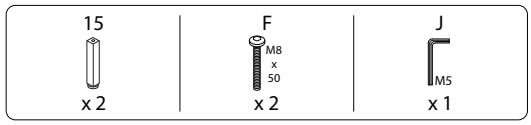

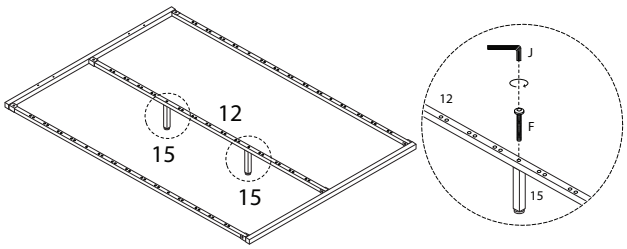

9/14

10

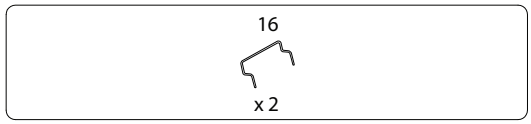

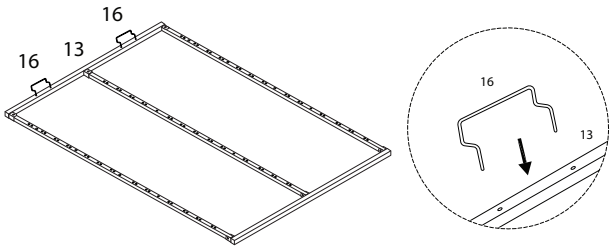

10/14

11

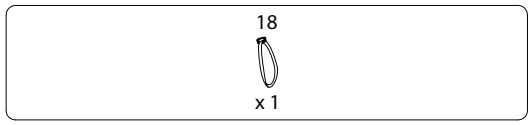

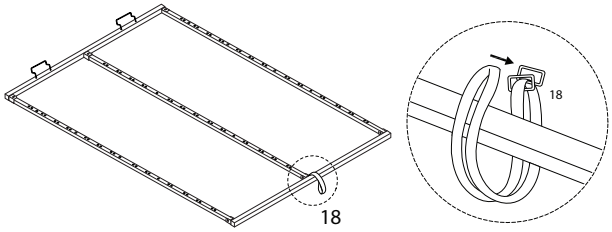

12

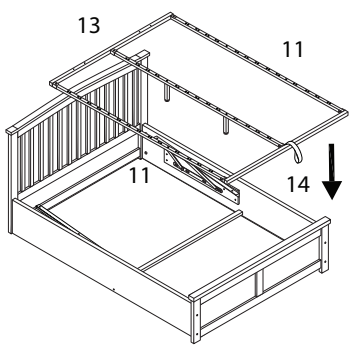

11/14

13

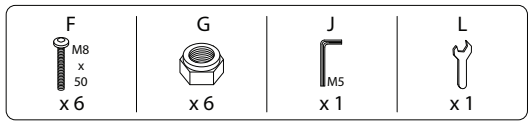

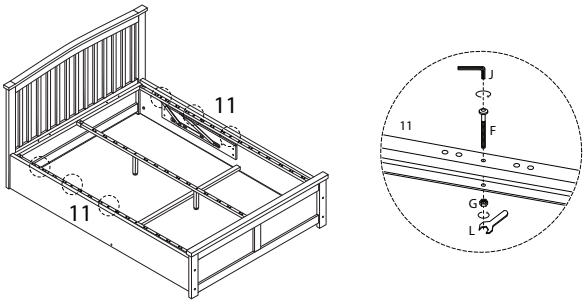

14

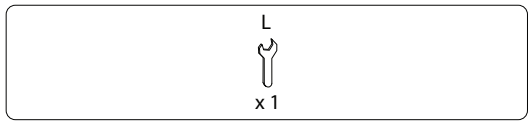

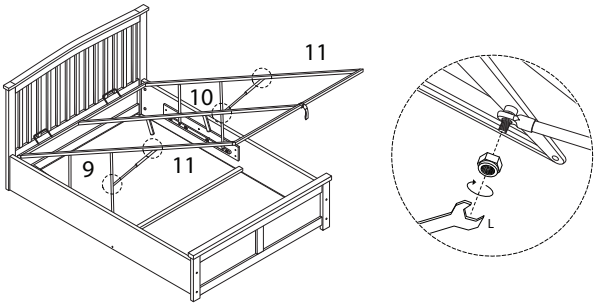

15 x 13

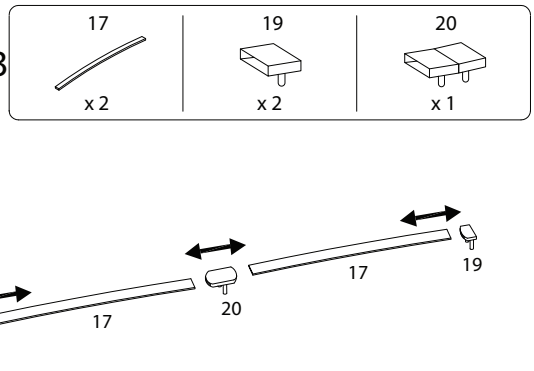

16

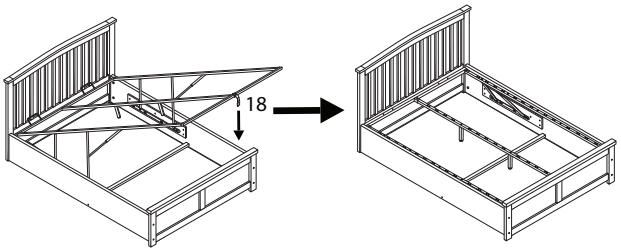

!

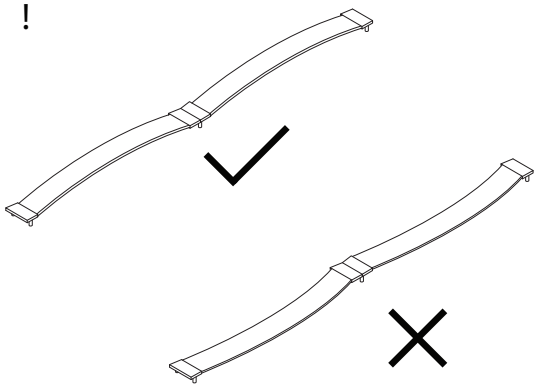

12/14

2520/CLARBEC/210825/

17

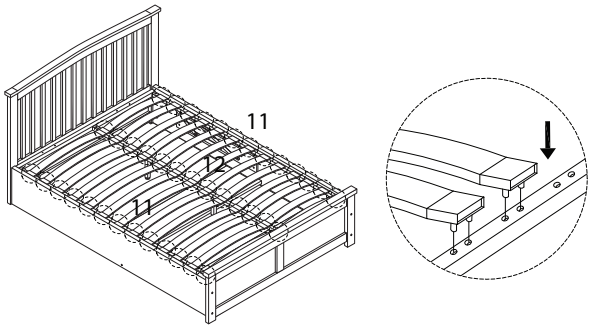

13/14

2520/CLARBEC/210825/

18

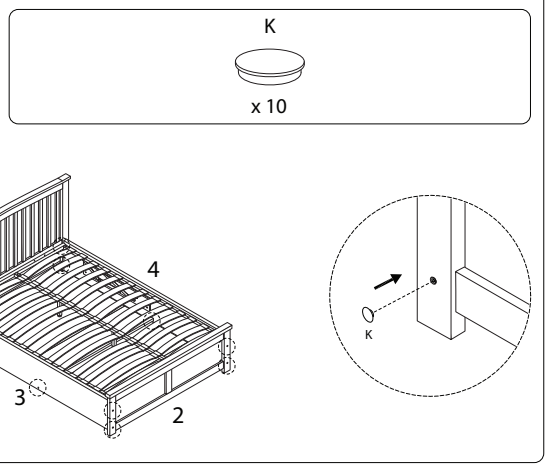

14/14

2520/CLARBEC/210825/