GLEEFUL



1/6



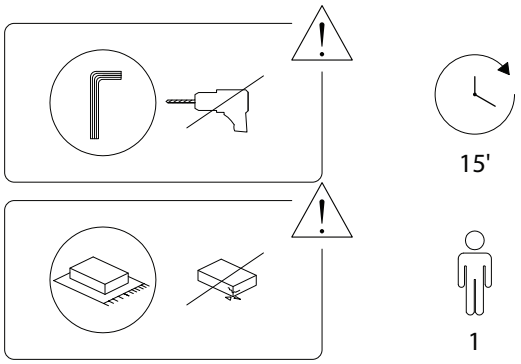

2/6

2748/GLEEFUL/080126/

A	B	C	D	E
x 1	x 1	x 1	x 1	x 4

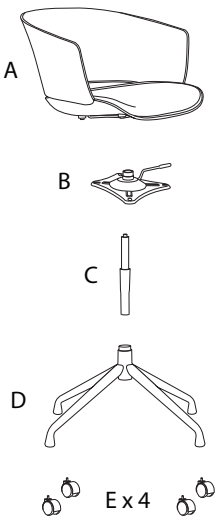

F	G	H	I
M6 x 16			
x 4	x 4	x 4	x 1

3/6

2748/GLEEFUL/080126/

!

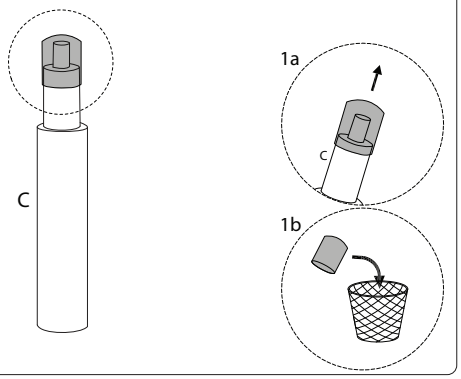

1

D	E
x 1	x 4

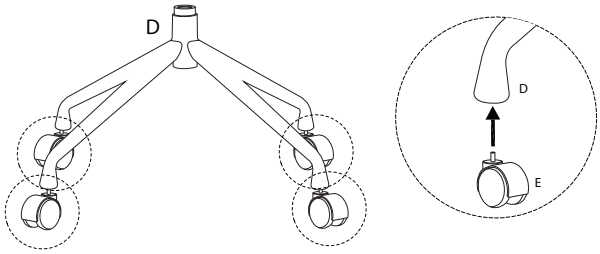

4/6

2748/GLEEFUL/080126/

2

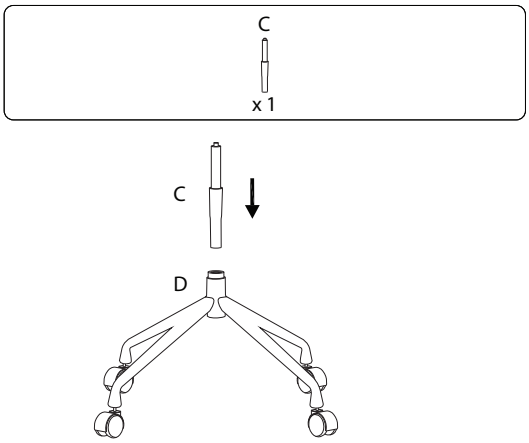

4

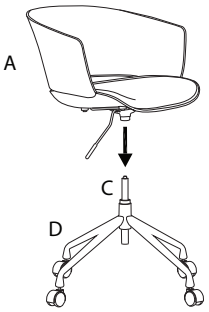

3

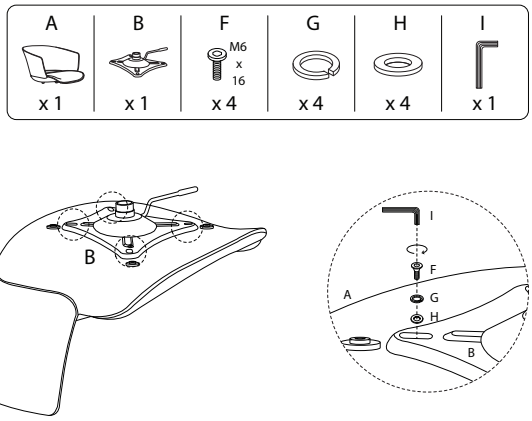

!

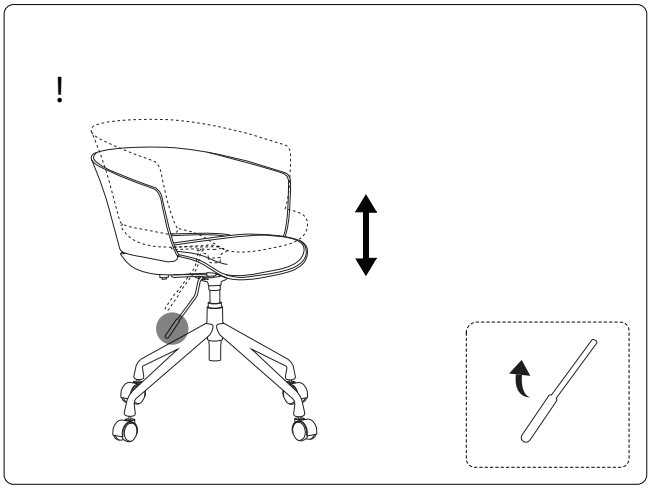

2748/GLEEFUL/080126/