MEUDON

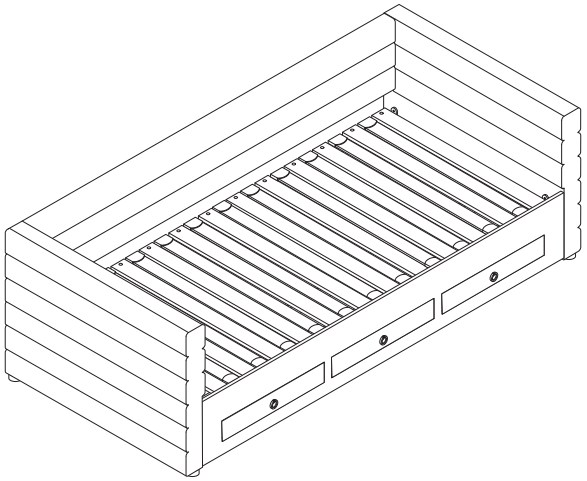

1/18

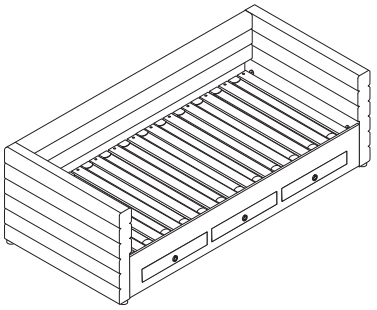

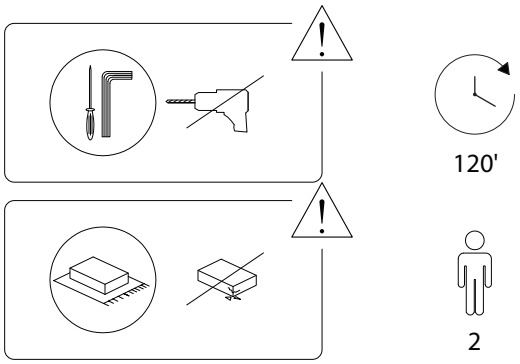

2/18

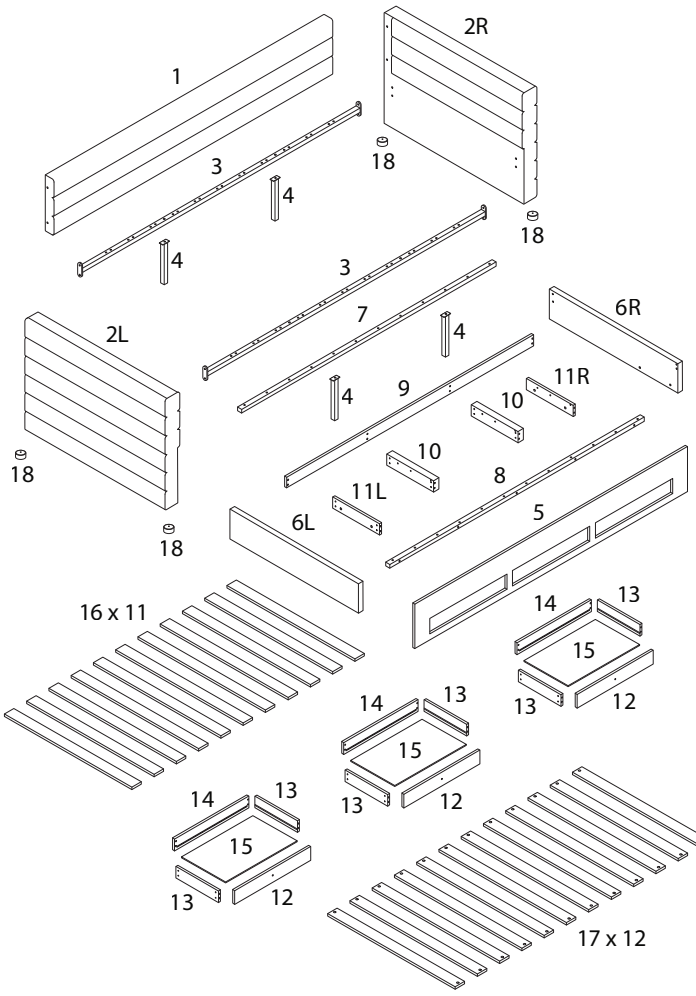

3/18

1	2L	2R	3
x 1	x 1	x 1	x 2
4	5	6L	6R
x 4	x 1	x 1	x 1
7	8	9	10
x 1	x 1	x 1	x 2
11L	11R	12	13
x 1	x 1	x 3	x 6

14	15	16	17	18
x 3	x 3	x 11	x 12	x 4

4/18

A	B	C	D
			
x 1	x 14	x 22	x 15

E	F	G	H
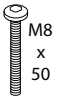			
x 2	x 3	x 44	x 8

I	J	K	L
			
x 4	x 4	x 40	x 40

ML	MR	NL	NR	O
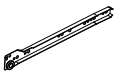	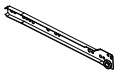	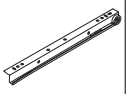	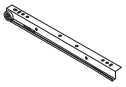	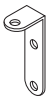
x 3	x 3	x 3	x 3	x 2

P	Q	R	S1	S2
		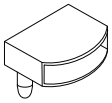		
x 2	x 4	x 22	x 3	x 3

1

2L	2R	18	A	I
x 1	x 1	x 4	x 1	x 4

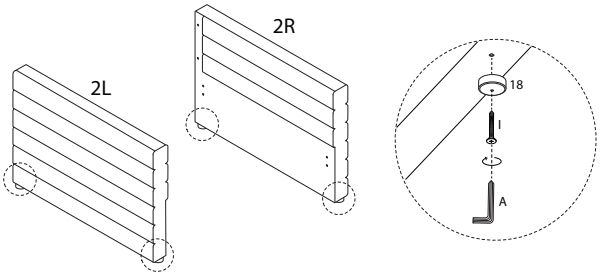

2

1	A	D	J
x 1	x 1	x 4	x 4

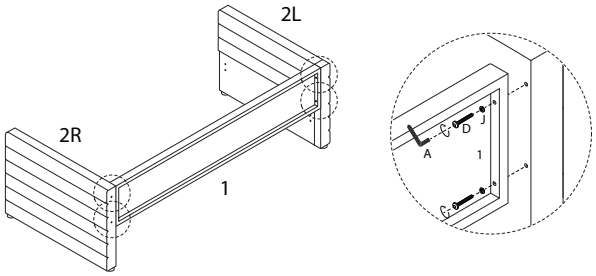

3

3	4	A	D
x 1	x 2	x 1	x 2

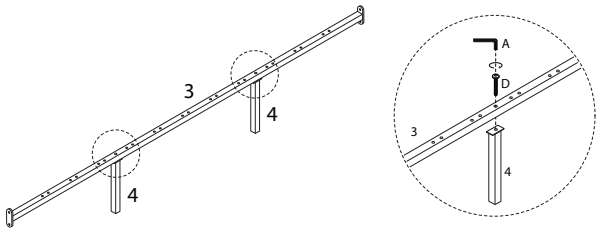

5

5	9	K
x 1	x 1	x 16

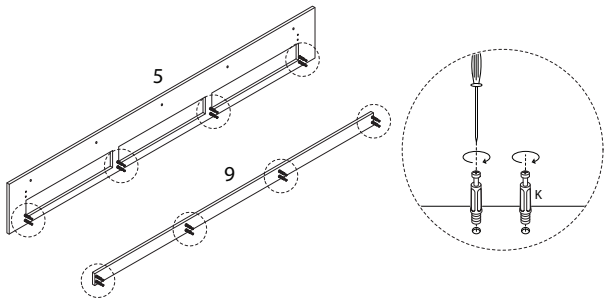

4

3	A	B
x 1	x 1	x 8

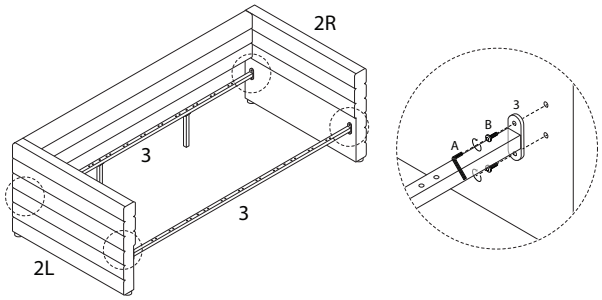

6

10	11L	11R	A	L
x 2	x 1	x 1	x 1	x 8

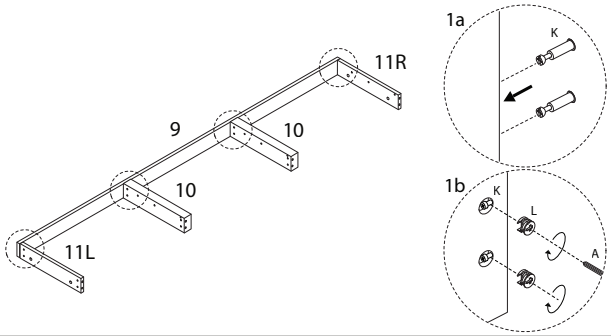

7

A	L
x 1	x 8

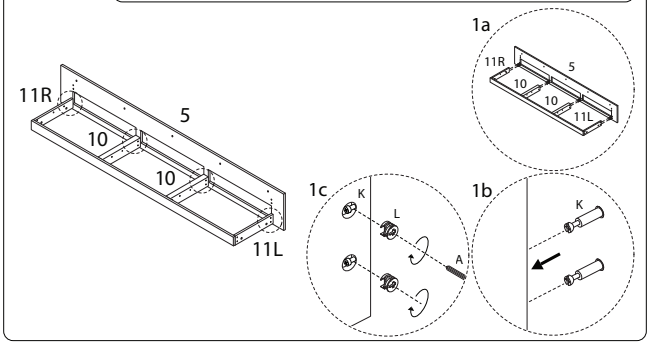

8

A	G	ML	MR
x 1	M3 x 16 x 18	x 3	x 3

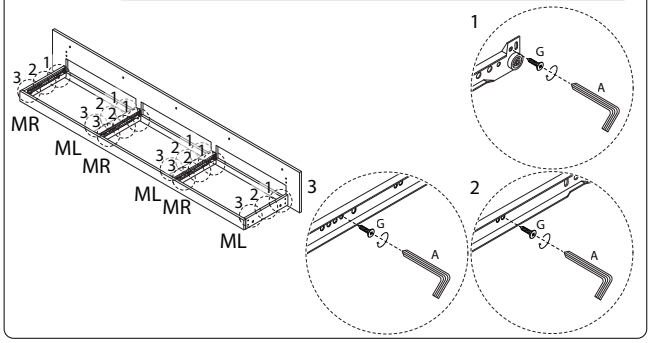

9

6L	6R	A	H	Q
x 1	x 1	x 1	M3 x 25 x 8	x 4

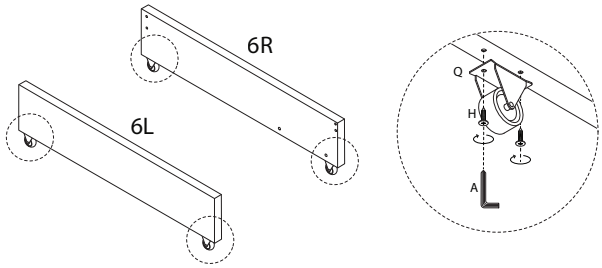

10

A	D
x 1	M8 x 40 x 4

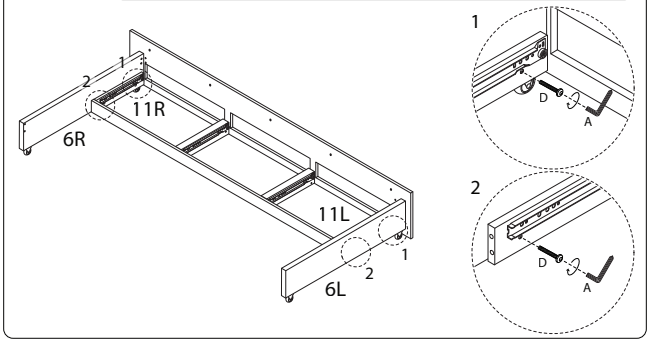

11

A	G	P
x 1	M3 x 16 x 8	x 2

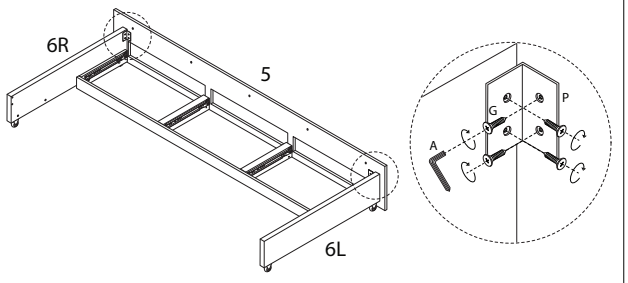

12

8	A	D
x 1	x 1	M8 x 40 x 5

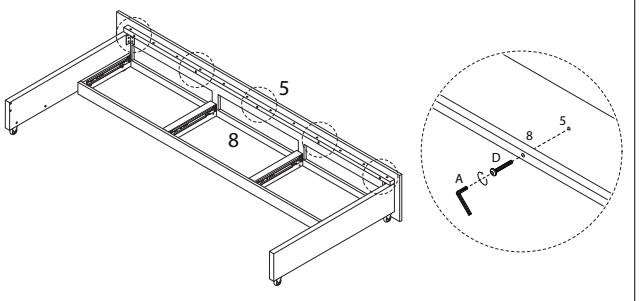

13

7	A	B	O
x 1	x 1	M8 x 18 x 2	x 2

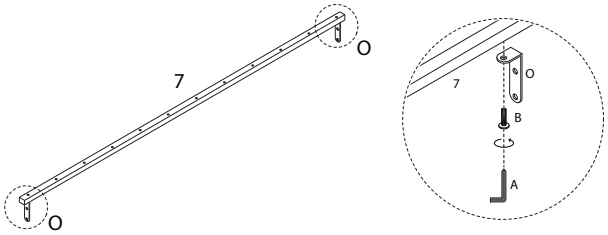

14

A	B
x 1	M8 x 18 x 4

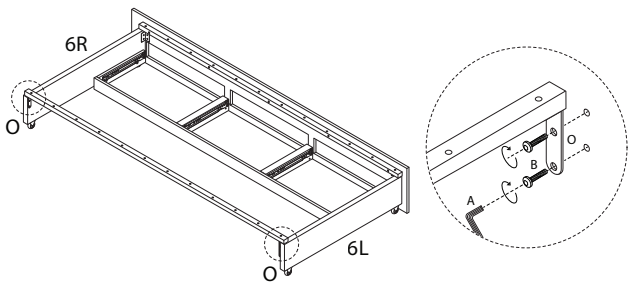

15 x 3

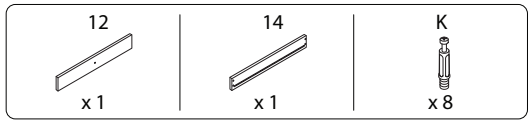

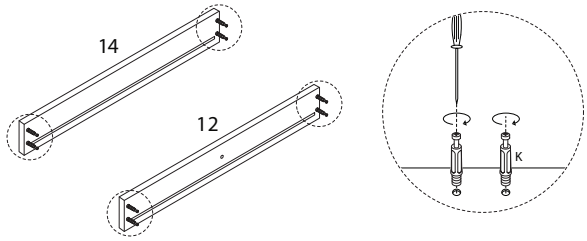

17 x 3

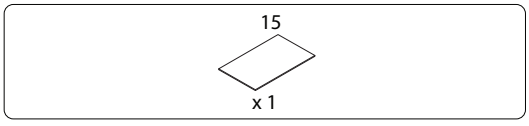

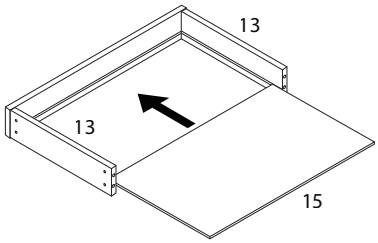

16 x 3

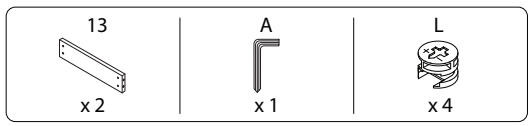

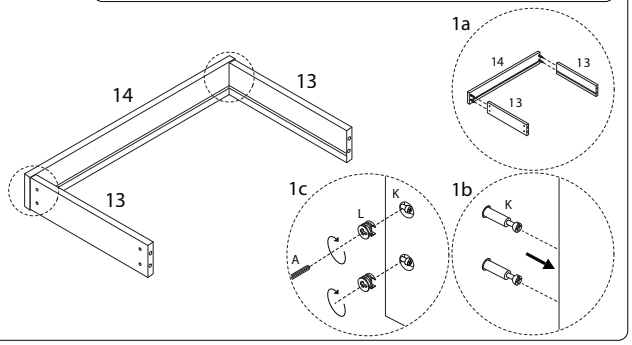

18 x 3

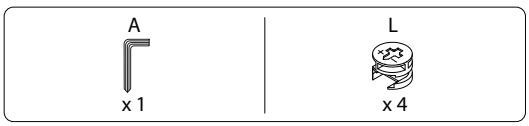

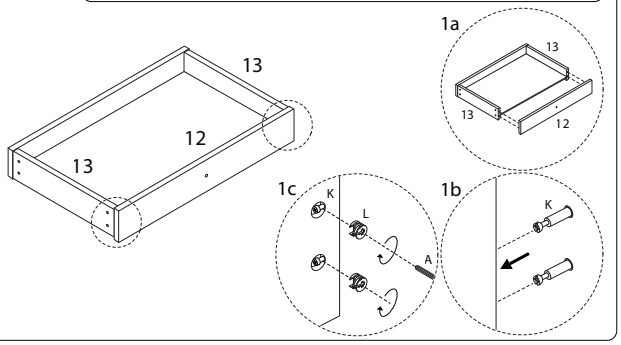

19 x 3

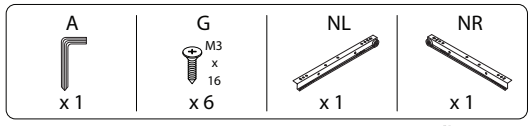

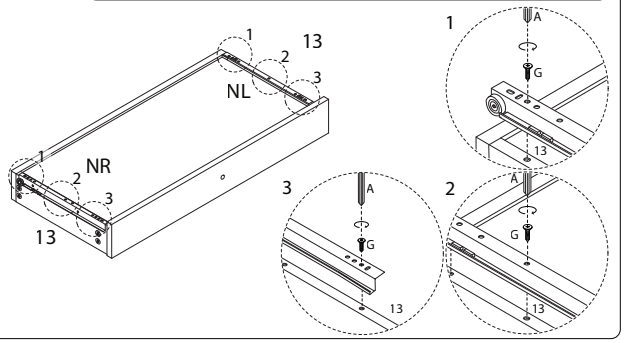

21

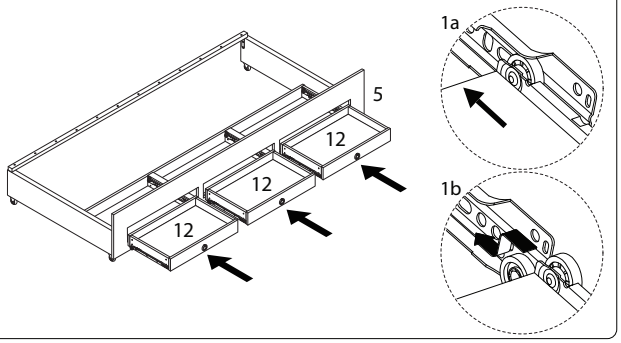

20 x 3

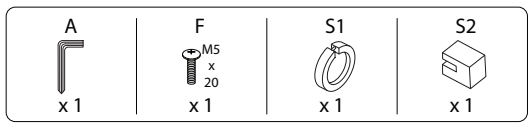

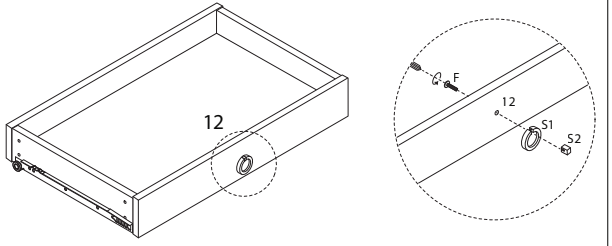

22

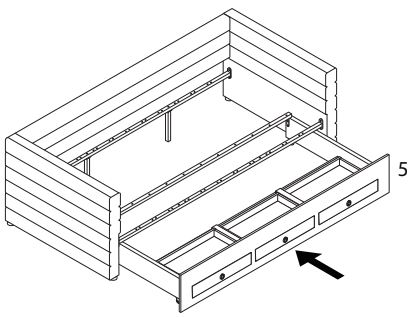

23

16	R
x 11	x 22

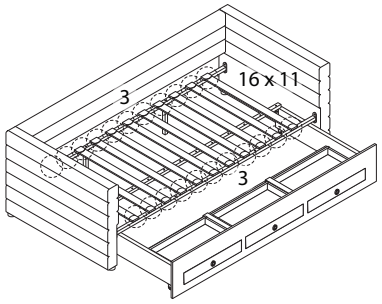

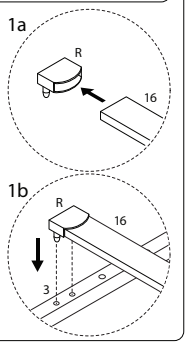

24

4	17	A	C	E
x 2	x 2	x 1	x 2	x 2

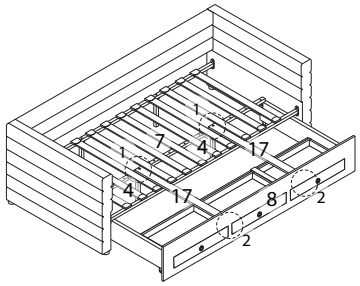

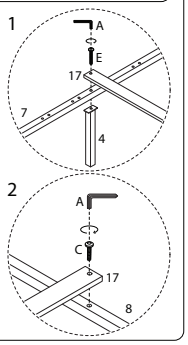

155/MEUDON/210926/

25

17	A	C
x 10	x 1	x 20

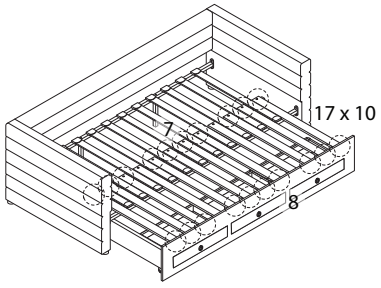

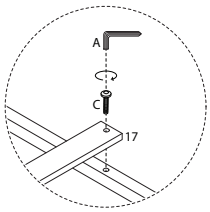

!

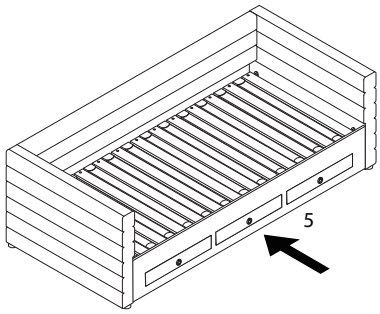

155/MEUDON/210926/