QUINTELA

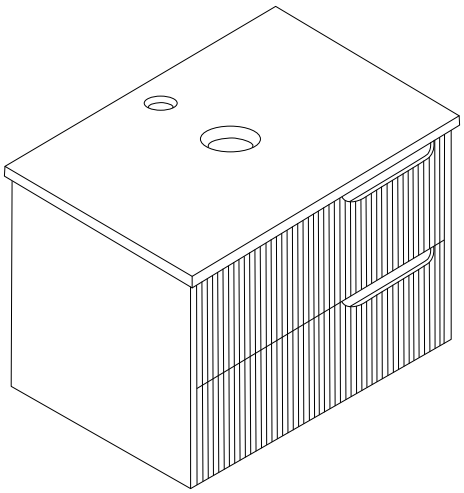

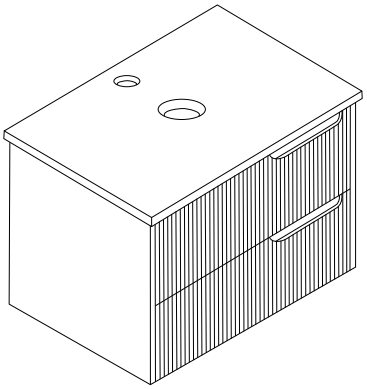

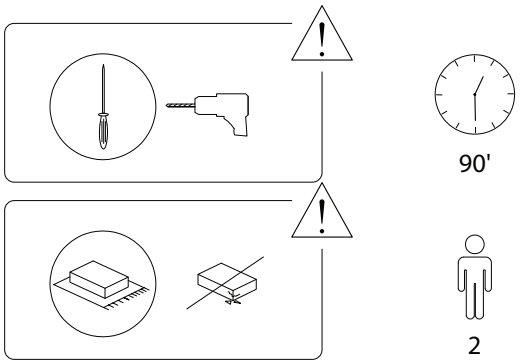

1/19

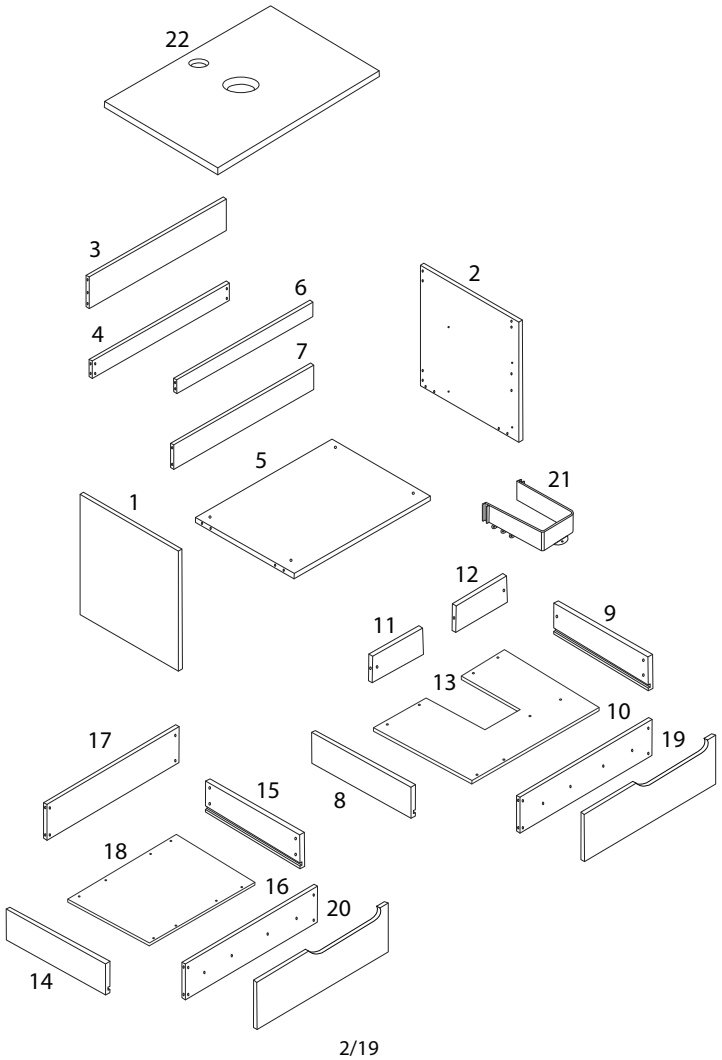

2/19

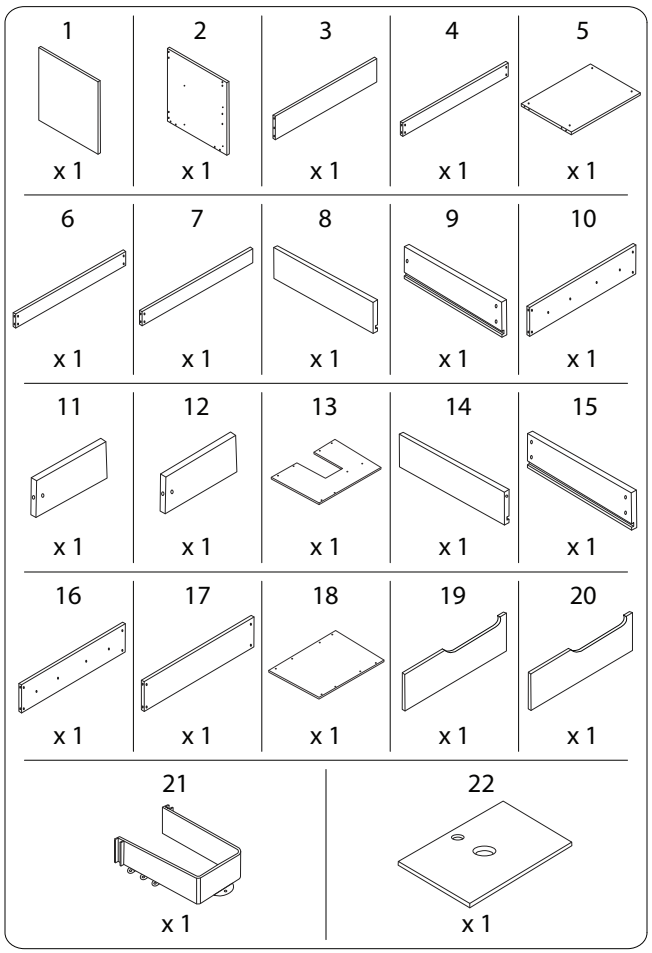

3/19

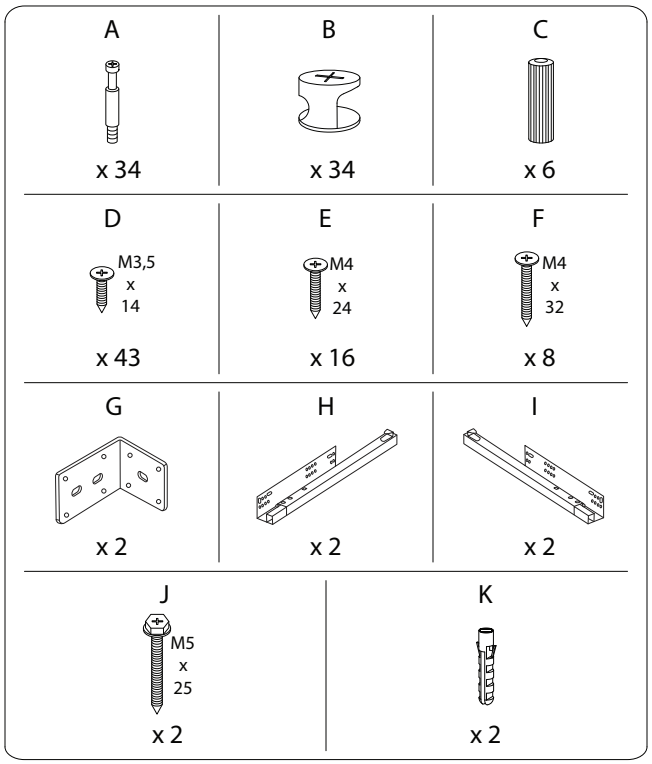
A
x 34
B
x 34
C
x 6
D
M3,5
x
14
x 43
E
M4
x
24
x 16
F
M4
x
32
x 8
G
x 2
H
x 2
I
x 2
J
M5
x
25
x 2
K
x 2

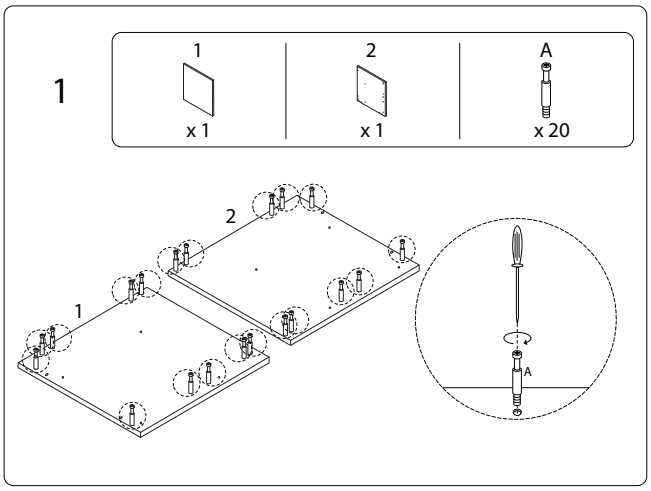
1
1
x 1
2
x 1
A
x 20
2
1
A

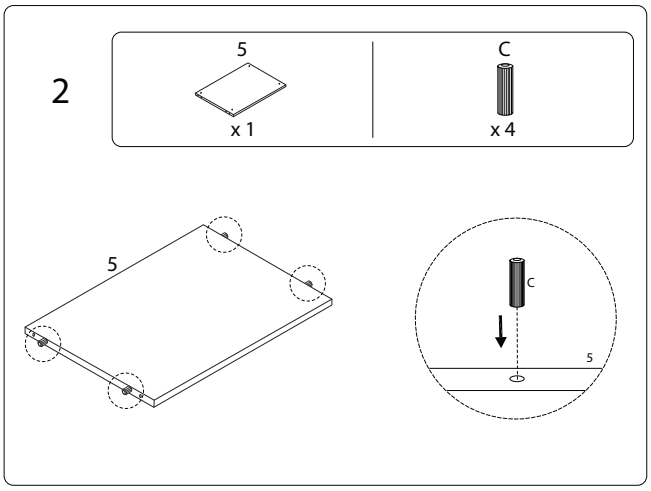
2
5
x 1
C
x 4
5
C
5

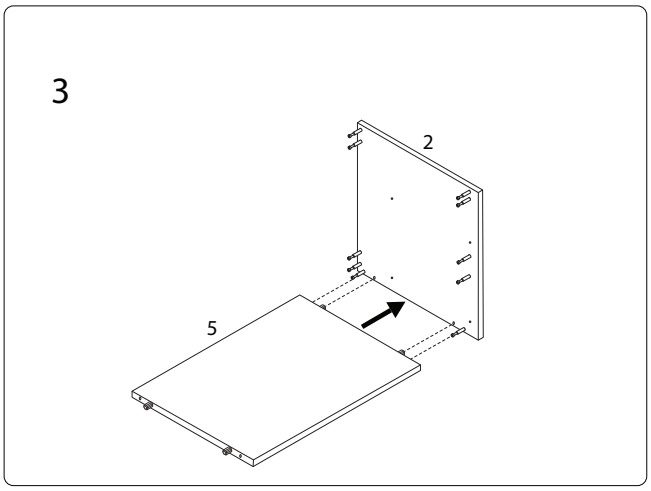
3
2
5

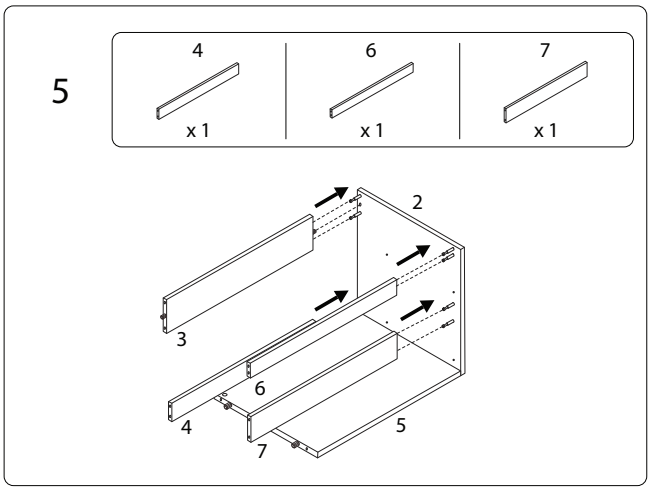
5
4
x 1
6
x 1
7
x 1
2
3
6
4
5
7

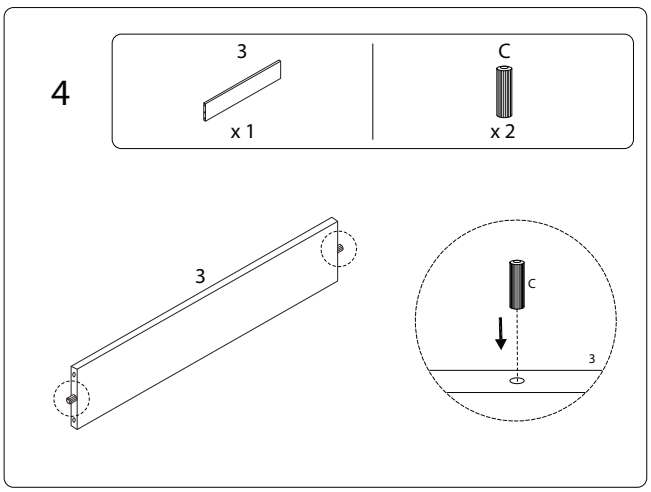
4
3
x 1
C
x 2
3
C
3

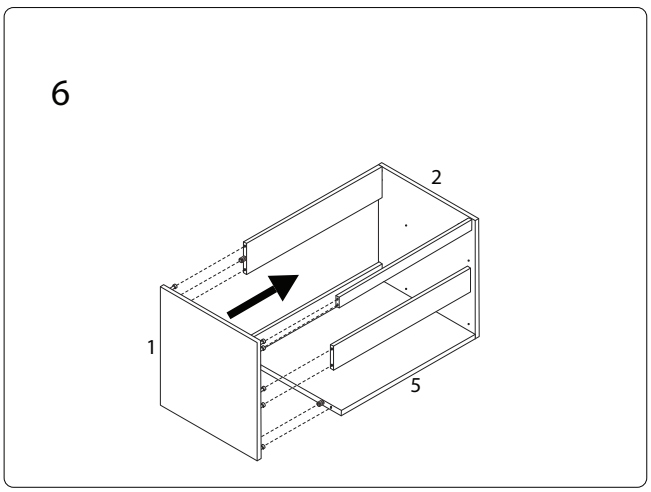
6
2
1
5

7

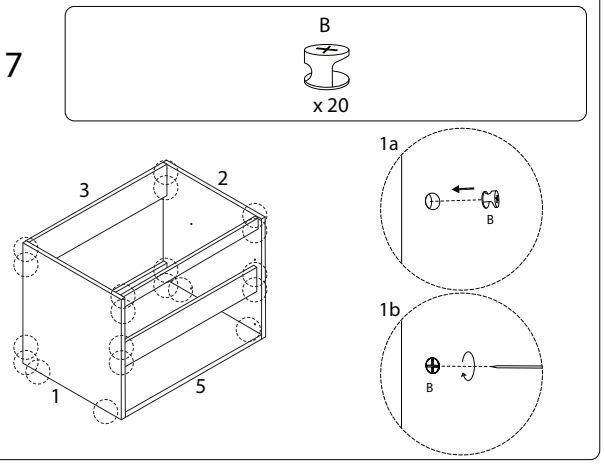

8

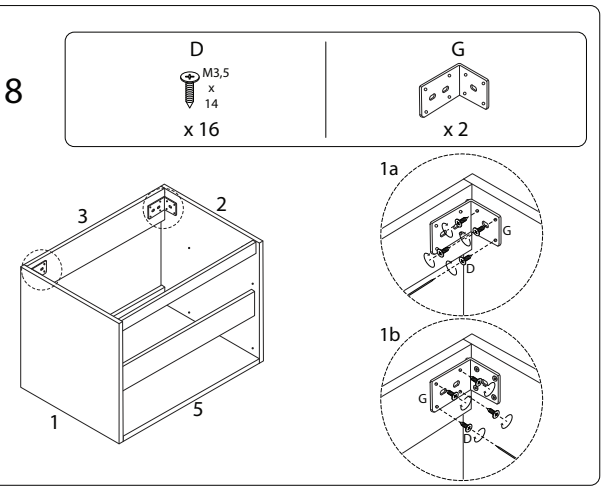

9

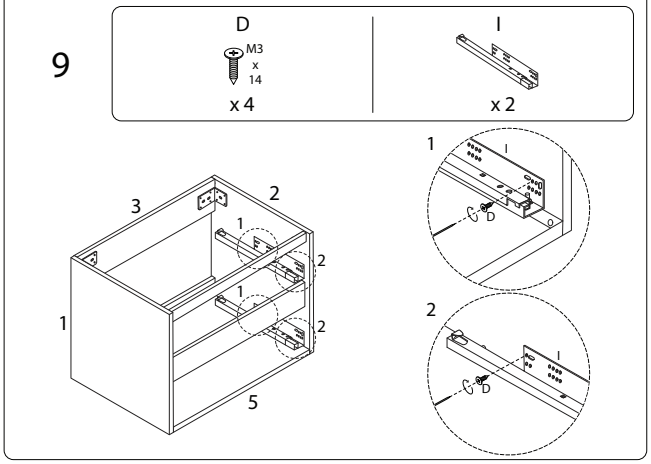

10

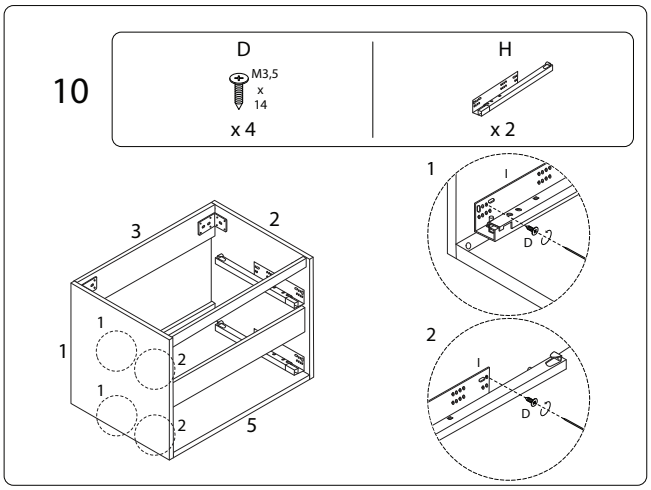

11

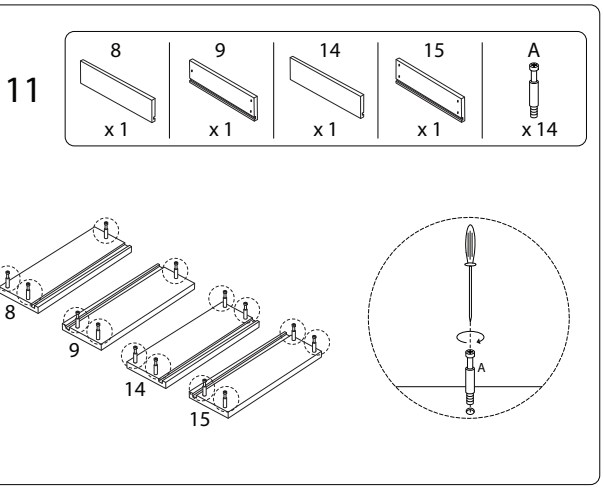

12

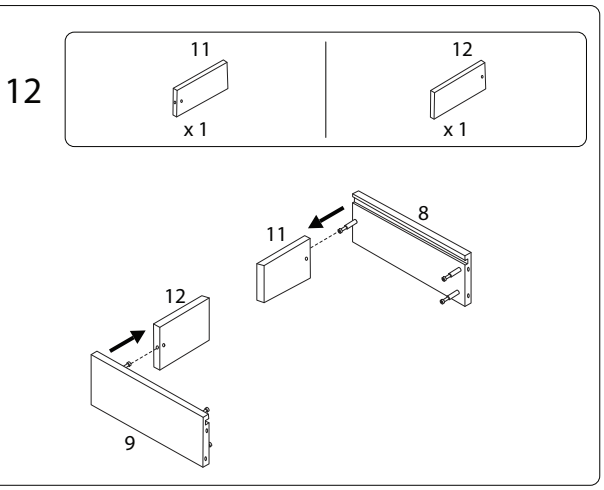

13

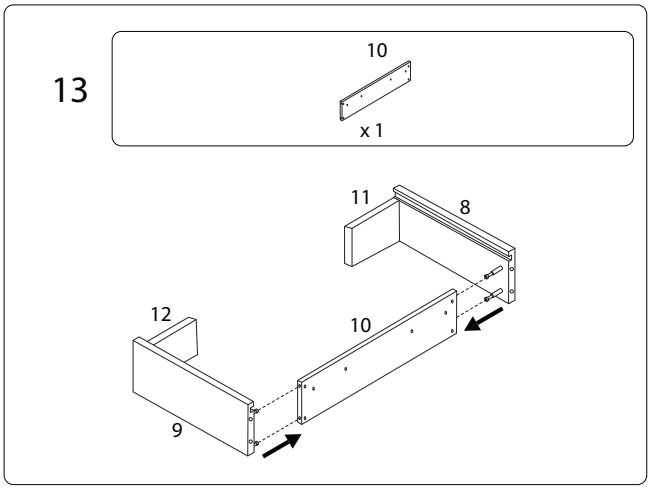

14

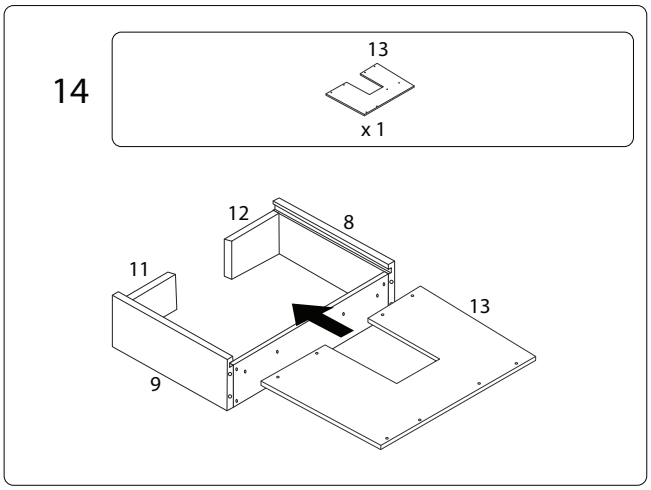

15

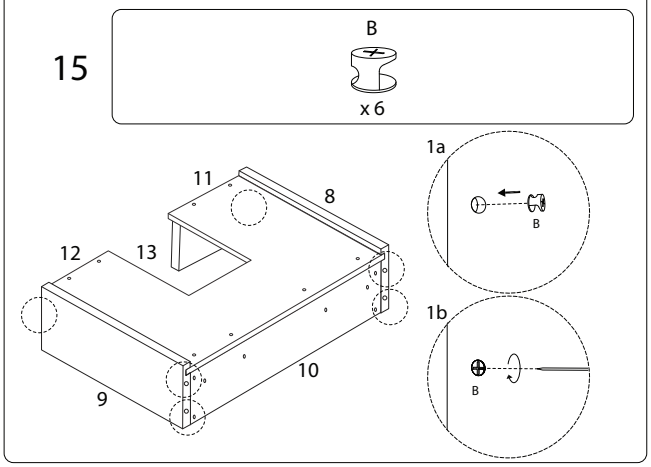

16

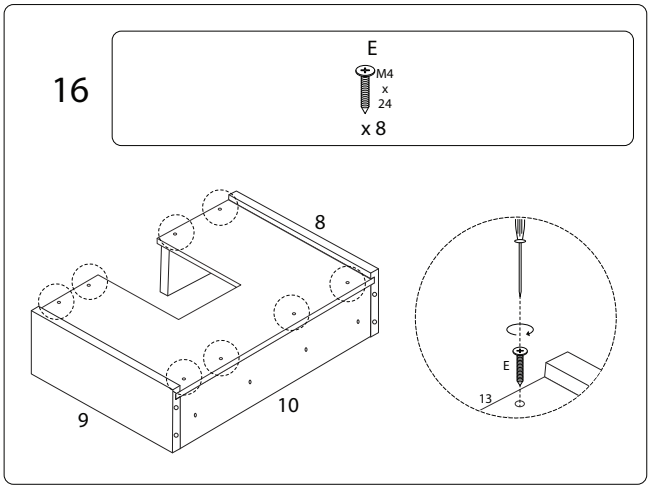

12/19

808/QUINTELA/210624/

17

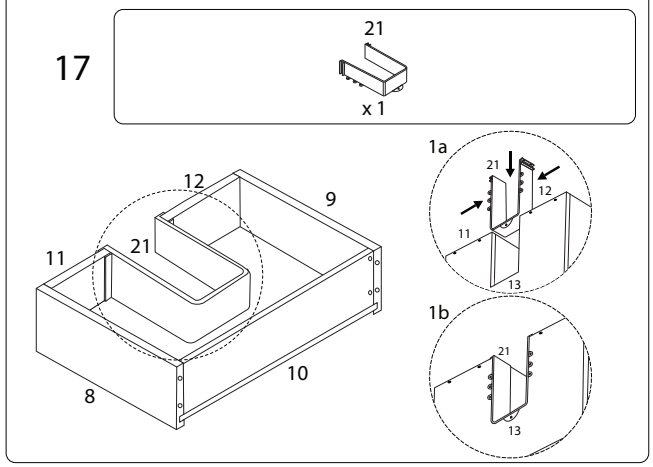

18

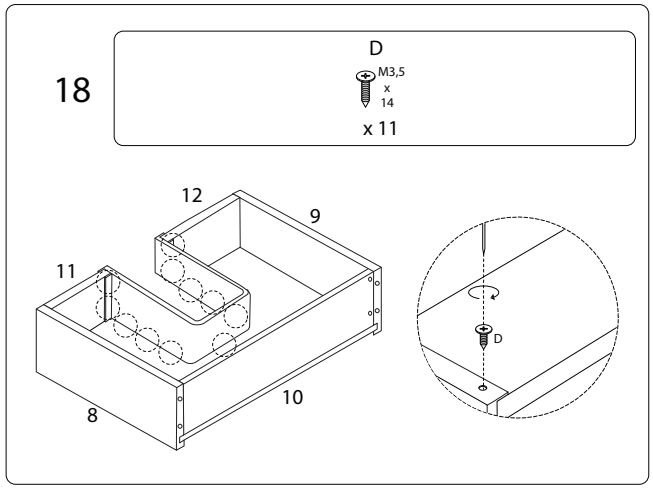

13/19

808/QUINTELA/210624/

19

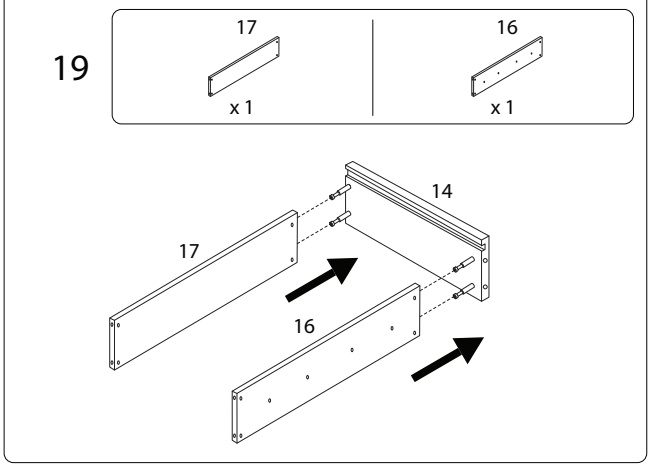

21

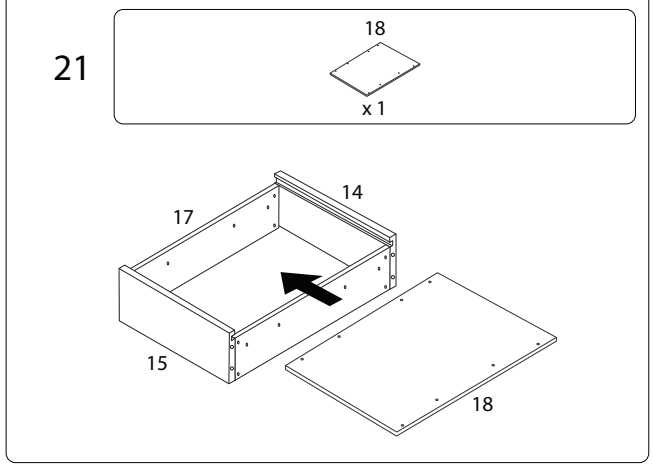

20

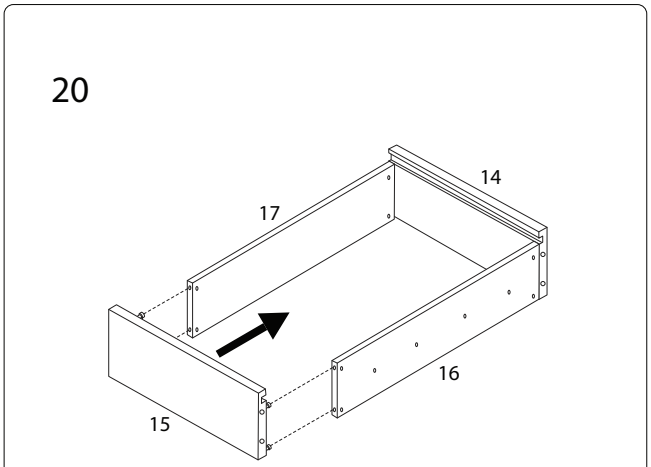

14/19

808/QUINTELA/210624/

22

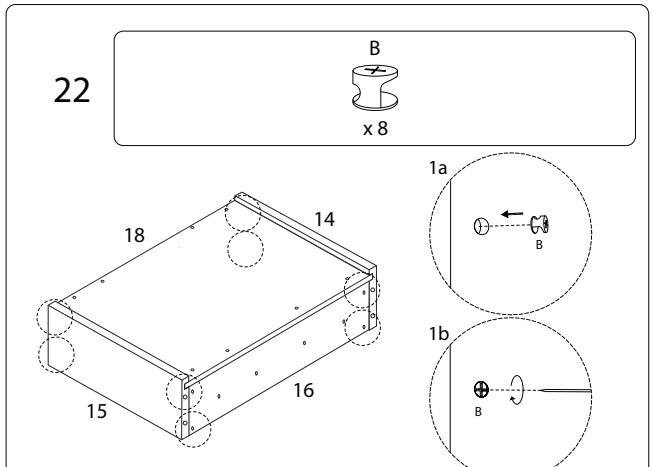

15/19

808/QUINTELA/210624/

23

E
M4 x 24
x 8

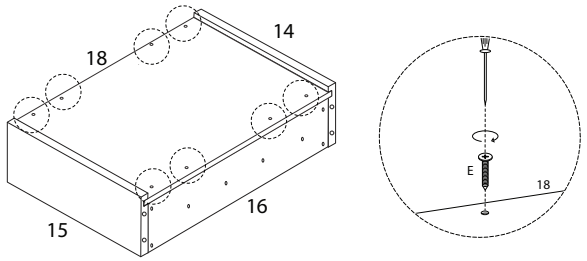

24

19
x 1

20
x 1

F
M4 x 32
x 8

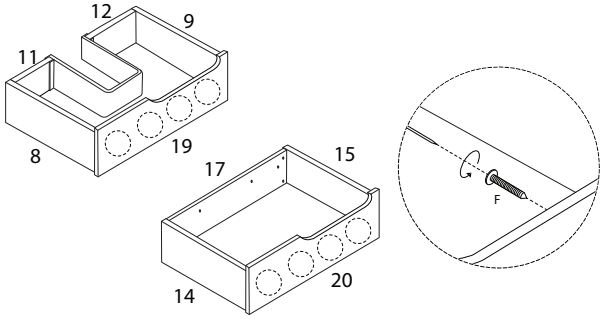

25

J
M5 x 25
x 2

K
x 2

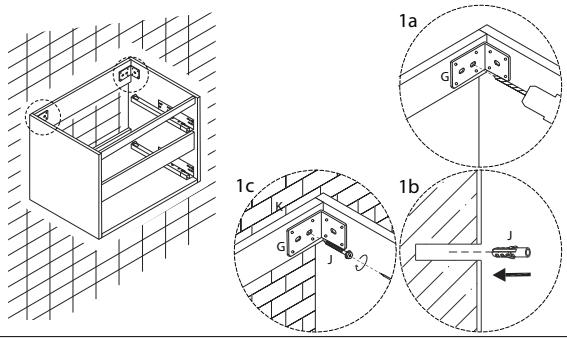

26

22
x 1

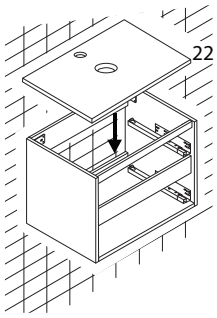

27

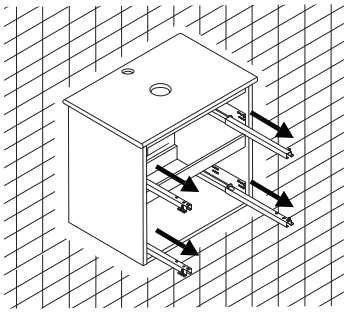

29

D
M3.5 x 14
x 8

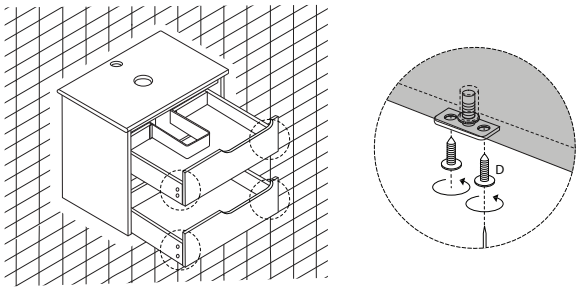

28

