DEVON

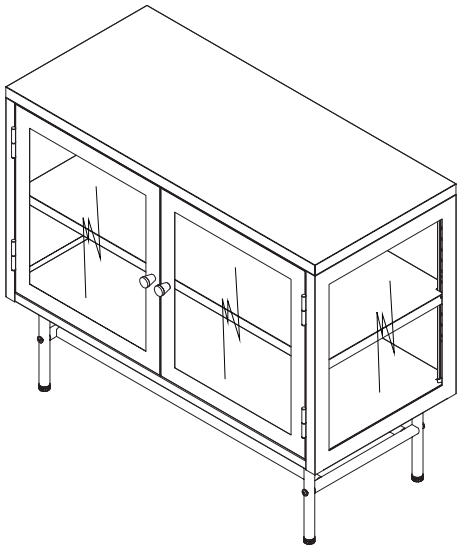

1/10

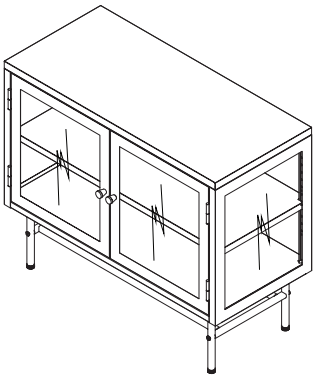

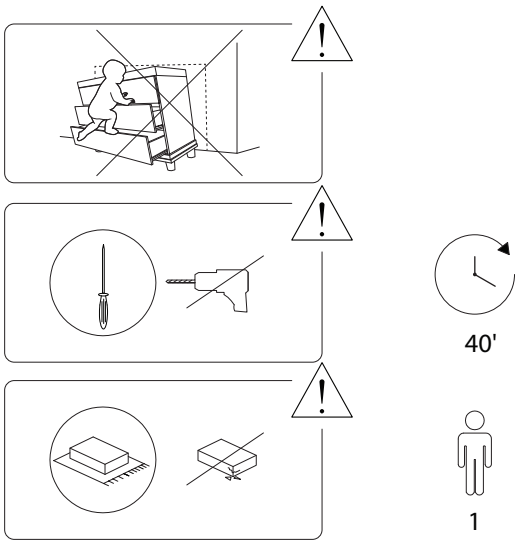

2/10

1914/DEVON/201026/

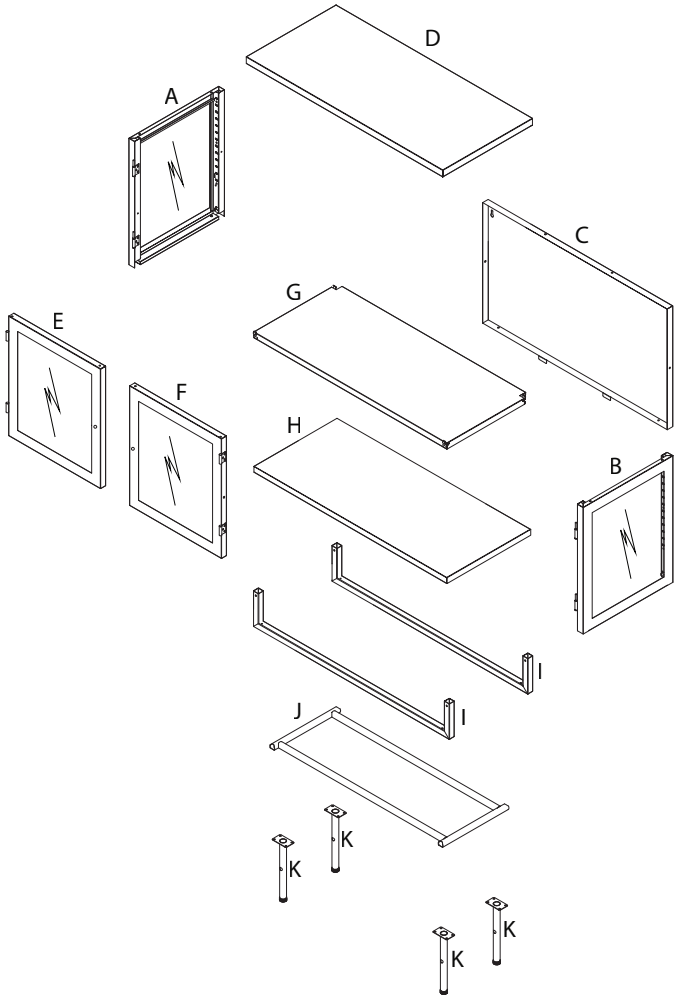

3/10

A x 1	B x 1	C x 1	D x 1
E x 1	F x 1	G x 1	H x 1
I x 2	J x 1	K x 4	1 x 2
2 x 4	3 M5 x 10 x 30	4 M4 x 22 x 2	5 Ø9.5 x 2	6 M6 x 40 x 4
7 Ø12 x 4	8 Ø7 x 4	9 x 1	10A x 2	10B M7 x 37 x 2

4/10

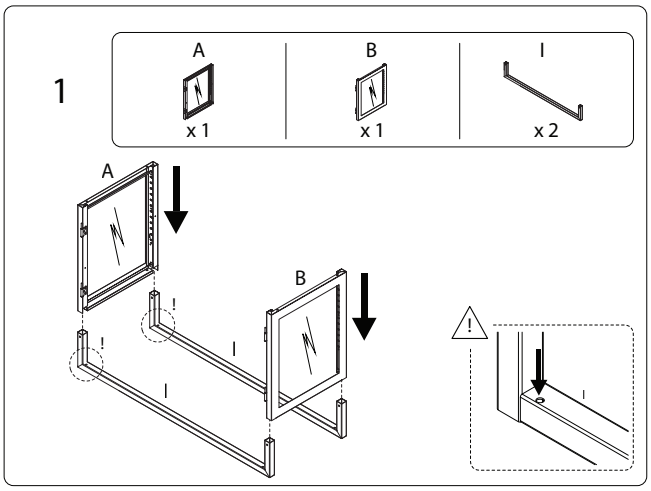
1
A
x 1
B
x 1
I
x 2
A
B
I
!

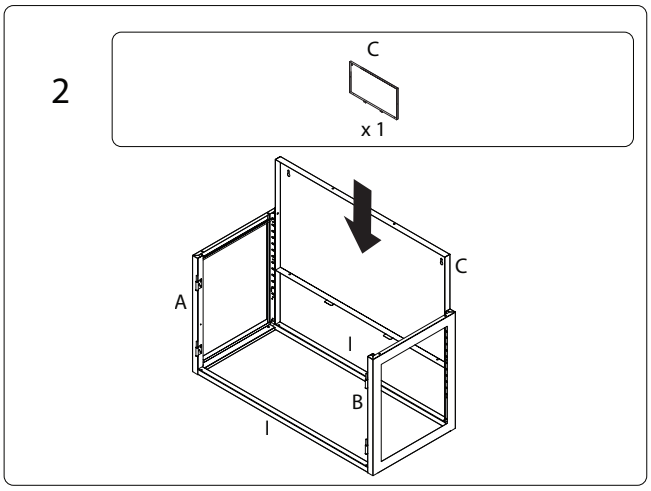
2
C
x 1
A
C
I
B
I

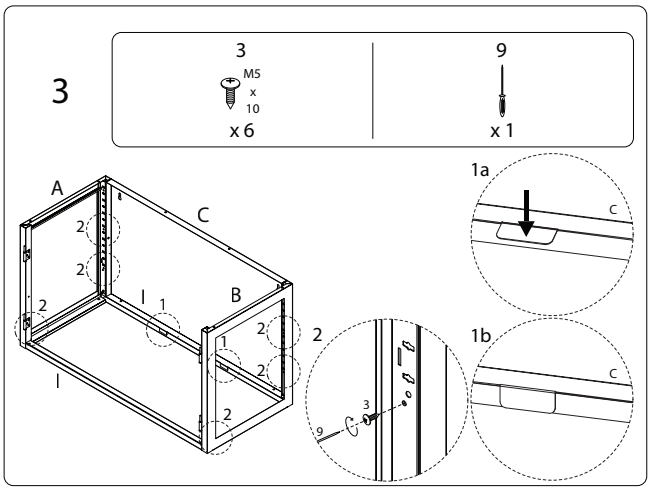
3
M5 x 10
x 6
9
x 1
A
C
B
I
1a
C
1b
C
3
9

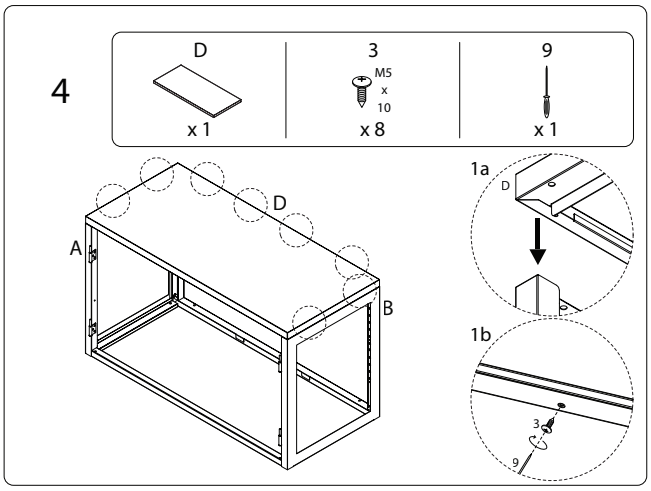
4
D
x 1
3
M5 x 10
x 8
9
x 1
D
A
B
1a
D
1b
3
9

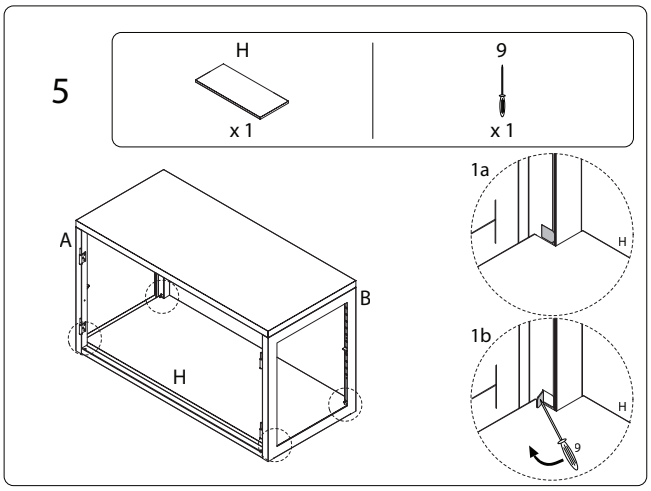
5
H
x 1
9
x 1
A
B
H
1a
H
1b
H
9

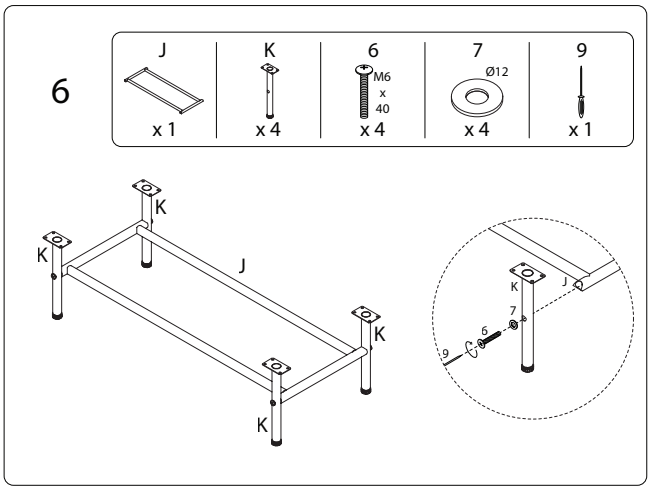
6
J
x 1
K
x 4
6
M6 x 40
x 4
7
Ø12
x 4
9
x 1
K
K
J
K
K
6
7
9

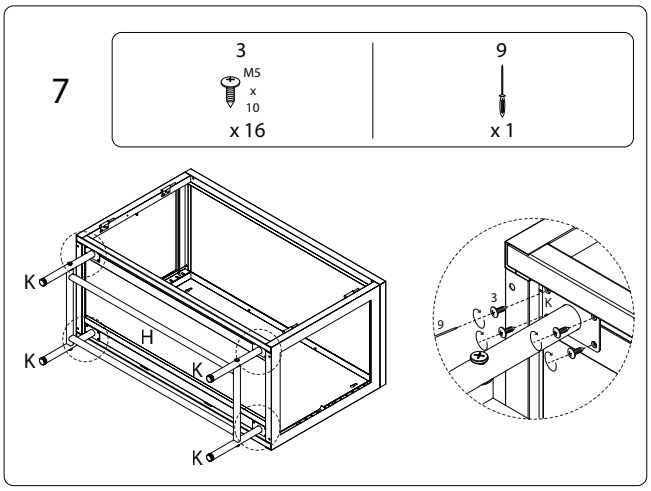
7
3
M5 x 10
x 16
9
x 1
K
K
H
K
K
3
K
9

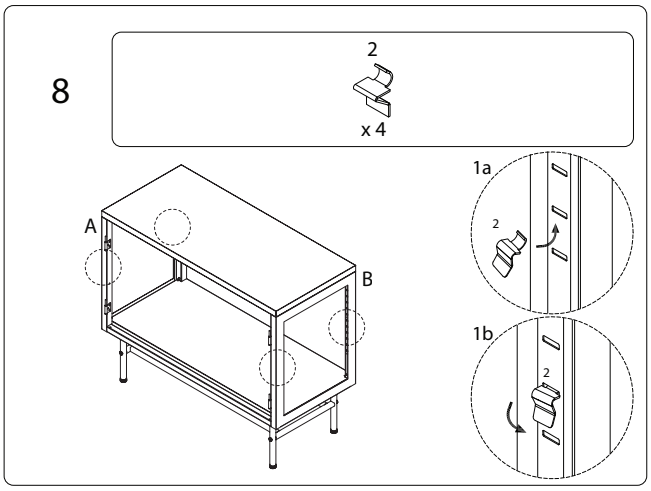
8
2
x 4
A
B
1a
2
1b
2

9

G
x 1

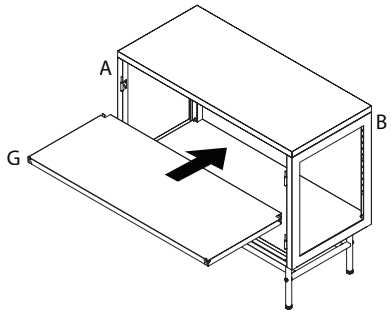

11

1	4	5	9
x 2	M4 x 22 x 2	Ø9.5 x 2	x 1

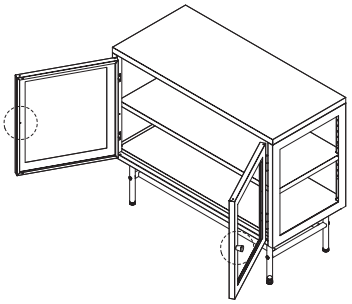

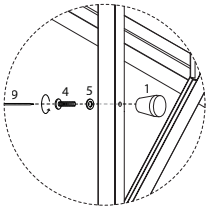

10

E	F	8
x 1	x 1	Ø7 x 4

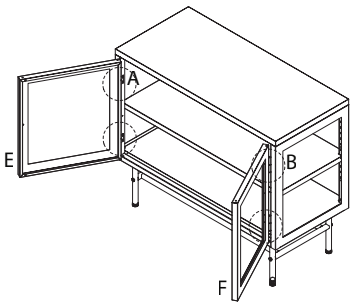

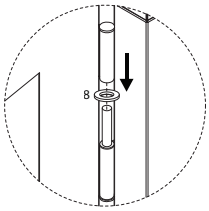

12

9	10A	10B
x 1	x 2	M7 x 37 x 2

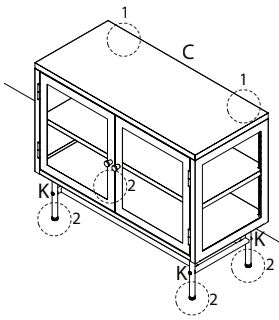

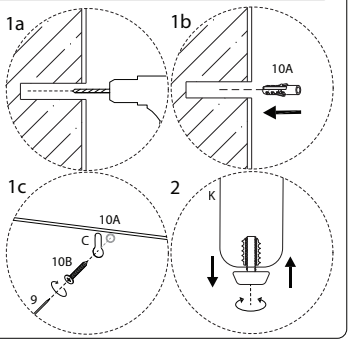

1914/DEVON/201026/

1914/DEVON/201026/