WINDUST

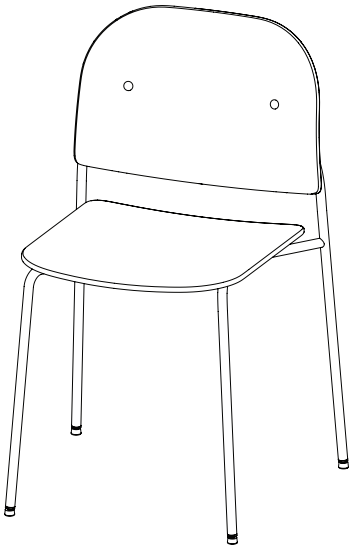

1/5

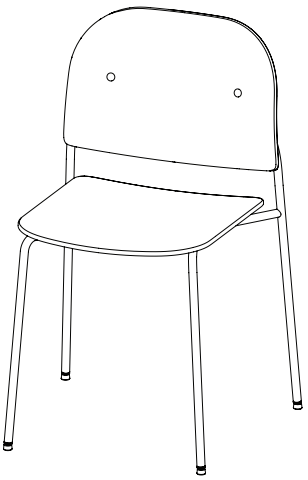

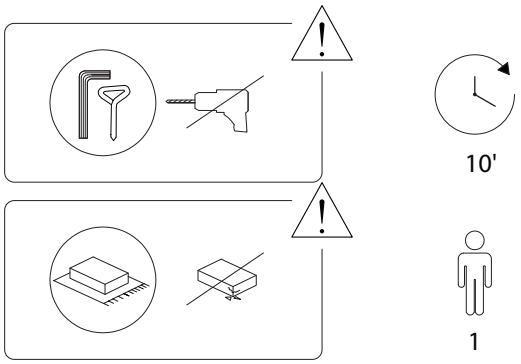

2/5

A	B	C
		
x 1	x 1	x 1

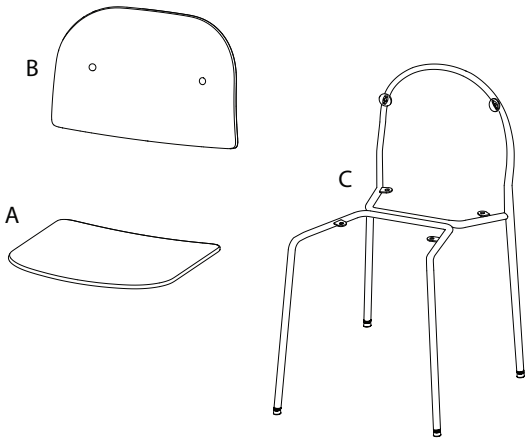

D	E	F	G	H
 M6 x 12		 M5 x 20		
x 4	x 2	x 2	x 1	x 1

3/5

!

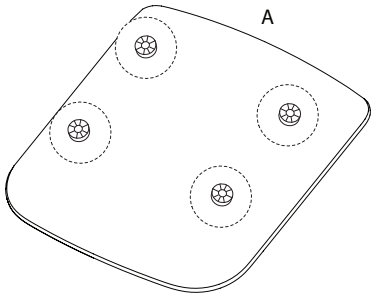

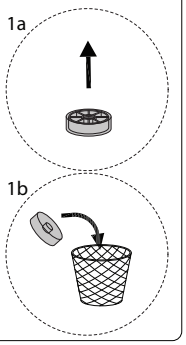

1

A	C	D	G
		 M6 x 12	
x 1	x 1	x 4	x 1

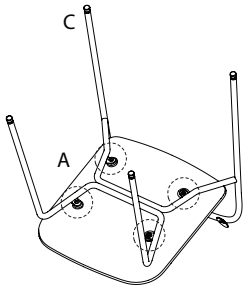

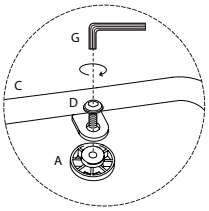

4/5

2

B	E	F	H
			
x 1	x 2	x 2	x 1

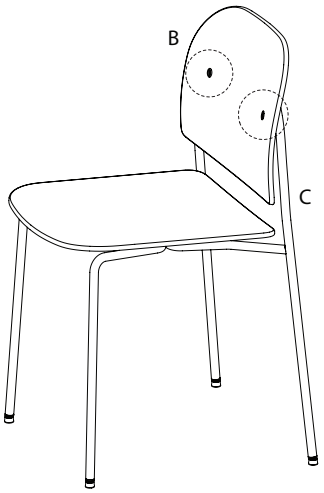

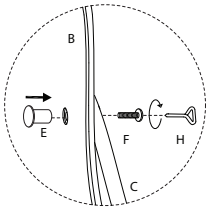

2182/WINDUST/150726